LET'S TALK
Times OF OMAN

OMAN ATTENDS PUBLIC-PRIVATE PARTNERSHIPS FORUM IN CAIRO

Oman is taking part in the Public-Private Partnerships (PPP) MENA Forum, held in Cairo, Egypt. The participation is aimed at highlighting Oman's experience with the PPP programme, as well as to benefit from international experiences in this field. >A2

HM GREETS PRESIDENT OF NAMIBIA

MUSCAT: His Majesty Sultan Haitham bin Tarik has sent a cable of greetings to President Dr. Hage Geingob of the Republic of Namibia on his country's Independence Anniversary. In the cable, His Majesty the Sultan expressed his sincere sentiments and best wishes of good health and happiness to President Dr. Hage Geingob. His Majesty also wished the people of Namibia further progress and prosperity. — ONA

Founded 1975 · Volume 48 No. 19 | 16 Pages · Baisas 200 · Subscription OMR63 | ISO 9001:2008 Certified Company | Chairman/Editor-in-Chief: Mohamed Issa Al Zadjali | Printed & Published by Muscat Media Group

TIMESOFOMAN.COM · FACEBOOK.COM/TIMESOFOMAN · TWITTER.COM/TIMESOFOMAN · YOUTUBE.COM/USER/TIMESOFOMANONLINE · TIMESOFOMAN.COM/WHATSAPP · TIMESOFOMAN.COM/RSS · LINKEDIN.COM/COMPANY/TIMES-OF-OMAN · INSTAGRAM.COM/TIMESOFOMAN

MOTHER'S DAY

Her Highness Honourable Lady sends message of congratulations on Mother's Day

MUSCAT: Her Highness the Honourable Lady Assayida Ahd Abdullah Hamed Al Busaidi, Spouse of the Sultan of Oman, has addressed a message of congratulations on the occasion of Mother's Day, which falls on 21 March every year. The message reads as follows: "A mother represents a symbol of sacrifices and a source of mercy. Her resourcefulness is inexhaustible; awards countless; blessings great; bounties plentiful and status lofty. Allah the Almighty honoured the mother and our Prophet advised us to do the same. It has thus become incumbent on us to take care of the mother, honour her and respect her. On the occasion of Mother's Day, we are delighted to send our heartfelt sentiments of appreciation and gratitude to every mother who worked hard to provide a decent, comfortable life to the family. Our greetings to every mother who exerted sincere efforts and remained vigilant in upbringing her children and endured hardships for their wellbeing so that they could become loyal in serving their countries and all of humanity. Happy Mother's Day."

See also >A4

Chane, Menditto claim inaugural XTERRA Oman titles in Musandam

A4

OMAN'S AVIATION SECTOR SET TO FLY HIGH IN 2023

CAA officials outlined projects underlying the robust growth of the aviation sector

Times News Service

MUSCAT: Implementation of the first phase of the construction of Musandam Airport project (consultancy studies), refurbishment of the southern runway at Muscat International Airport, and updating the National Civil Aviation Strategy in line with Oman Vision 2040 are among the key goals in 2023 set by the Civil Aviation Authority (CAA).

Press briefing

At a press briefing, CAA officials spoke in detail on various projects underlying the robust growth of the aviation sector in the Sultanate of Oman with hopes that the aviation industry in the nation will fly high.

Strategic plans, achievements of the past year and plans for 2023 were all detailed at the briefing.

Eng. Nayef Ali Al Abri, CAA chairman, said: "The civil aviation sector in the Sultanate of Oman achieved satisfactory results in 2022 after the impact of the COVID-19 pandemic." >A5

'Reducing aircraft noise near airport a priority'

Times News Service

MUSCAT: Aircraft noise can be disturbing to those who live around airports and is considered to be one of the most significant environmental concerns, affecting people living near airports.

The Civil Aviation Authority is aware of the concerns and is committed to reduce the noise in and around the Muscat International Airport.

Speaking to Al Shabiba radio, Hamed Al Barashdi, CAA's director general of strategic planning, said that 'authority considers it as a priority issue and is taking steps to reduce the noise around the airport'. >A5

MINISTRY OF ENDOWMENTS AND RELIGIOUS AFFAIRS

People invited to sight Ramadan crescent

Times News Service

MUSCAT: The Sultanate of Oman's Ministry of Endowments and Religious Affairs (MERA) calls on people to sight the crescent of the Holy Month of Ramadan on Wednesday, March 22, 2023.

In its announcement, the ministry said: "The Ministry of Endowments and Religious Affairs calls on everyone to sight the crescent of the month of Ramadan for this year, on Wednesday evening, on Sha'aban 29, 1444, which corresponds to March 22, 2023."

In the event of the crescent being sighted, people are asked to report on the following phone numbers: 24694400 - 24644037 - 24644070 - 24695551 - 24644004."

The first day of fasting for the Holy Month of Ramadan in the Sultanate of Oman is likely to be on Thursday (March 23, 2023), with Oman's leading astronomical expert saying that "the crescent moon could be sighted on March 22."

Ramadan is determined by the Islamic lunar calendar, which begins with the sighting of the crescent moon.

Astronomical expert Dr. Sobih Al Saadi said: "The crescent moon will be born on Tuesday, March 21, 2023, at exactly 9:24pm (Oman time) with no sightings of any type being expected that night."

"However, on the night of March 22, Wednesday, the new moon should be easily visible to the naked eye in most of the Sultanate's governorates and many parts of the Middle East and North Africa. The first fasting day is thus expected to be March 23, Thursday, for these countries."

For countries where the moon is not sighted, the first day of fasting will be March 24.

TOP THREE INSIDE STORIES

OMAN

State Council discusses draft of biometrics law

1 The State Council discussed the draft 'Biometric Fingerprint Law' referred by the Council of Ministers, and the opinion of the Legal Committee on it. The Council also discussed the study submitted by the Culture, Information and Tourism Committee on 'Arts and their role in supporting the national economy'. >A3

MARKET

GCC banks resilient despite banking woes

3 With the spillover effects of the US bank distress still developing, however, the impact will likely be limited for most rated banks in the Gulf Cooperation Council (GCC) region. >B1

OMAN

GDP at current prices exceeds OMR44bn

2 Oman's GDP at current prices rose by 30% at the end of December 2022 to reach OMR44.08bn compared to OMR33.90bn at the end of December 2021, according to the latest NCSI data. >A2

OMAN

PRAYER TIMINGS

Dhuhr 12:19pm
Asr 3:45pm
Maghrib 6:23pm
Isha 7:33pm
Fajr (Tomorrow) 4:54am

IN CAIRO

Oman participates in PPP forum

CAIRO: The Sultanate of Oman is taking part in the Public-Private Partnerships (PPP) MENA Forum, held in Cairo, Egypt.

The participation is aimed at highlighting Oman's experience with the PPP programme, as well as to benefit from international experiences in this field.

The PPP Mena Forum aims to launch new and innovative partnerships that drive social and economic growth in the region. It also discusses effective policies for PPP projects in infrastructure.

The forum also covers a spectrum of topics, namely reviewing the mechanism of transforming PPP projects to green economy, among other topics.

Moreover, the Ministry of Finance awards PPP projects for the establishment, financing and preparation of infrastructure projects for public entities and facilities.

Sultanate of Oman
Ministry of labor

AUCTION ANNOUNCEMENT

The Internal Tender Committee at the Ministry of Labour announces the following tender:

Tender No.	Tender title	Last date for tender purchase online	Bid submission date
26/2022 Re-floated	Providing maintenance services for the buildings of the Directorate General of Labour in Al Dakhiliyah Governorate	Wednesday 29/03/2023 at 2:00 pm	Wednesday 05/04/2023 at 10 a.m.

- Specialized establishments may obtain the tender's documents online through the following link, starting from Tuesday 21/03/2023 at 08:00 am: /https://etendering.tenderboard.gov.om
- Each bid shall enclose a bank guarantee for 1% of the total bid value issued by a local bank addressed to the Ministry of Labour and valid for 90 days from the date of bid submission.
- Bids shall be submitted online along with a copy of the bank guarantee. The original bank guarantee shall be submitted when requested by the Ministry.
- Bids shall be opened at 11:00 am on Monday 05/04/2023.

(The Ministry shall not be bound to accept the lowest or any other bid)

labour_OMAN

NCSI DATA

Oman's GDP at current prices up by 30% to OMR44 billion

MUSCAT: The Sultanate of Oman's Gross Domestic Product (GDP) at current prices increased by 30 percent at the end of December 2022 to reach OMR44.08 billion compared to OMR33.90 billion at the end of December 2021, according to the latest data issued by the National Centre for Statistics and information (NCSI).

This rise is attributed mainly to the surge in oil activities at the end of December 2022 by 61.6 percent to stand at OMR16,619.7 million compared to OMR10,287.5 million in December 2021.

Non-oil activities rose by 16.9 percent from OMR24,734.9 million at the end of December 2021 to OMR28,925.9 million at the end of December 2022.

Further, industrial activities went up by 23.5 percent from OMR6,882.3 million at the end of December 2021 to OMR8,501.9 million at the end of December 2022.

Activities of agriculture, forestry and fishing increased by 12.8 percent from OMR719.2 million to OMR811.5 million at the end of December 2022.

Service activities recorded a growth by 14.5 percent from OMR17,133.4 million to OMR19,612.4 million at the end of September 2022.

— ONA

MARITIME SECURITY CENTRE

Commander of Unified Maritime Operation Centre visits MSC

MUSCAT: Commodore Mishal Jaber Al Khalifa, Commander of the Unified Maritime Operation Centre and his accompanying delegation on Monday visited the Maritime Security Centre (MSC).

The guest was greeted by the Acting Head of the MSC. The guest was briefed on the roles and tasks carried out by the centre in maintaining the safety of the maritime environment. He also toured the centre's facilities and viewed its latest equipment and technologies that are used in carrying out its national duties. — ONA

CULTURAL HERITAGE

Oman Gallery opens at Nairobi National Museum

NAIROBI: The National Museum inaugurated on Monday Oman Gallery at the Nairobi National Museum in Kenya, as an embodiment of the common history and cultural heritage between the two countries.

The gallery, titled "Oman-Kenya: A Collective Memory", is divided into four main sections, which are: Ancient South Arabian Kingdom, Omani influence at the East African Coast, development of Omani Kingdoms and dynasties, and key Omani personalities at the East African Coast. Jamal Hassan Al Moosawi, Secretary General of the National Museum, said that the opening of Oman Gallery at the Nairobi National Museum comes within the framework of cultural diplomacy pursued by the National Museum, and based on the memorandum of partnership that was signed last year in 2022 at Muscat.

Al Moosawi added that the exhibited collections focus on the cultural and historical aspects of the Sultanate of Oman and its strong historical relations with the East African coast, which trace their roots back to the first century all the way to the present day. The collection, he said, embodies the impact of Omani integration into the East African coast in terms of economic, social, cultural and political aspects, which led to the establishment of cities along the East African coast.

Said Mohammed Al Amri, Charge D'affaires of Oman's embassy in Nairobi said that the inauguration of the gallery is the result of the efforts and the cooperation between the two countries. The move, he added, contributes to boosting the deep rooted bilateral relations by displaying and preserving mutual heritage.

Oman Gallery celebrates the historical and cultural ties between the Sultanate of Oman and the Republic of Kenya. It offers a glimpse into the various kingdoms and dynasties in Southern Arabia and East Africa, with a reflection on notable Omani personalities. The gallery includes a collection of selected artefacts, including a compilation of Prose in Marine Sciences "Sufalia, Moa'lakiya and Alttayiya" by the author and copyist Ahmed bin Majid Al Sa'adi dating back to the 16th century.

The manuscript provides an in-depth understanding of the sciences of the navigator Ahmed bin Majid Al Sa'adi on the coast of East Africa, in addition to a lithograph depicting Swahili people from the book "Documents on History, Geography and Trade in East Africa" by Charles Guillain dating back to 1857. — ONA

REFERRED BY COUNCIL OF MINISTERS

State Council discusses draft of 'Biometric Fingerprint Law'

MUSCAT: The State Council discussed the draft 'Biometric Fingerprint Law' referred by the Council of Ministers, and the opinion of the Legal Committee on it.

The Council also discussed the study submitted by the Culture, Information and Tourism Committee on 'Arts and their role in supporting the national economy'.

This came during the seventh session of the fourth session of the seventh term of the State Council, chaired by Sheikh Abdulmalik bin Abdullah al-Khalili, Chairman of the Council, in the presence of the honourable members of the Council, and the Secretary-General.

In a statement Rashid bin Salem al Badi, Chairman of the Legal Committee, explained that the committee appreciates the importance of the draft biometric fingerprint law due to the absence of legislation regulating the collection, preservation, use, storage and disposal of biological samples in a way that guarantees the legal use of these samples in biotechnology and its products and the protection of genetic data in the Sultanate of Oman.

He added that the committee discussed the draft law, the opinion of the Shura Council, and the observations made by the honourable members of the Council, and concluded with the preparation of a report that includes formal and substantive observations about the draft articles.

During the extensive discussions of the draft law, the members expressed their views and observations regarding the amendment of some articles.

The session also discussed the study submitted by the Culture, Media and Tourism Committee on "Arts and their Role in Supporting the National Economy", where Dr Aisha bint Hamad Al Darmaki, Chairperson of the Committee, explained the importance of this sector in supporting the national economy and diversifying sources of income as one of the promising areas for economic diversification.

She added that what has been taken by the government during the last stage in the field of arts is one of the achievements of the Omani society that must be preserved and developed economically.

She explained that the study sheds light on the arts, and its role as an important tributary for the national economy, in line with achieving the goals of the future vision of Oman 2040, noting that updating legislation, systems and regulations governing the arts sector enhances efficiency in investment for this sector, and includes the arts sector as an economic industry within the five-year plans. The Sultanate of Oman is working on raising its contribution to the gross domestic product and the volume of production to generate jobs and business opportunities.

The chairperson of the committee confirmed that the study's endeavor to enhance the integration of roles and activate government partnership with the private sector and civil society comes in order to adopt projects that enhance the arts sector and the creative economy, and to employ the arts sector that abounds in all governorates of the Sultanate of Oman to be among the paths and tributaries of stimulating tourism and cultural activities and community events.

She stressed the need for developing areas in a sustainable manner, and enhancing the investment of artistic and specialised festivals to encourage and support workers in the arts sector.

At the end of the session, the members were briefed on the report of the General Secretariat on the activities of the Council's organs. -ONA

SEND US YOUR VIEWS AND COMMENTS
www.facebook.com/timesofoman

OMAN

COMMENTARY

Mothers are the real warriors of life

SALEH AL-SHAIBANY

Many Omani women juggle between professional careers and the important role of being a mother and the two tasks are never easy when they have to satisfy pressing demands at work and home.

For most of them, it is a seesaw of children and career trying to create a delicate balance between childcare and a successful professional life.

But it is never easy to be in two places in the space of twenty four hours.

To mark the occasion of Omani Mother's Day, Times of Oman met with two Omani women who talked about the 'magic reality' of motherhood as they try to get it right for their children as the 'perfect' mothers and an 'obedient' professionals in their workplaces.

OMANI MOTHER'S DAY

Lubna Al-Riyami

Sumaiya Al-Busaidi

Sumaiya Suleiman Al-Busaidi is Head of Inflight Entertainment System and Connectivity at Oman Air, who has 11-year old son and 8-eight year old daughter.

She says 'time management' is the essence of motherhood and this quality cannot be compromised to raise successful children.

"Being a working woman means being a master of time management. It is about finding a way to balance the demands of work and family responsibilities, without sacrificing one for the other. It's also about blending them in a way that works for you and your family," Sumaiya told Times of Oman with a tone of voice that is laced with strength and conviction.

But Sumaiya said that her inspiration is not just in her character but stems from her own experience with family members and friends as well.

"My grandmothers, my mother and aunts were all an inspiration to me in the way they raised their children. Together with my friends, they gave me and still do, their unwavering love and support that inspire me every day as a mother," Sumaiya said.

For Lubna Ahmed Al-Riyami, a Senior Resource Planning Specialist at Oman Airports Management Company (OAMC), strength and resilience are the two qualities that a mother needs to carry on to raise a successful family while at the same battling with a demanding career.

"When children were shouting the word 'mother' while I was growing up, I never really understood it until now that I have two of my own children. I would say a mother is not just a simple mother but a warrior because years of raising children is never easy," Lubna, the mother of two sons, a 10-year old and a 7-year old, told Times of Oman.

But what about time juggling between home and the world of deadlines and office pressure at work?

"I believe if you could manage your time well between work and home, you could do more than the famous quote "do the needful and the rest will be easy."

Both Sumaiya and Lubna now know what being a mother means, like so many mothers before them and many more in the future.

They take nothing for granted. They have learned to tame the conflict within themselves to compromise their busy working schedules and their important roles as mothers.

Chane, Menditto claim inaugural XTERRA Oman titles in Musandam

MUSCAT: The beautiful Musandam Peninsula, dubbed the 'Norway of Arabia' for its beautiful Khors (rocky inlets), small villages and impressive, mountain-hugging roads were all enjoyed by the participants of the inaugural edition XTERRA Oman off-road triathlon event that concluded in Khasab on the weekend.

Musandam governorate has been growing as a popular tourism destination and the event was organised to bring more focus on this beautiful peninsula and also underline its credentials as a top venue for hosting world-class events.

Maxim Chane from France and Marta Menditto from Italy won the inaugural event on a hot and sunny day at the Khasab Fort on Saturday.

The closing ceremony took place at the Khasab Fort in the presence of Mubarak Ali al Rahbi, president of Musandam Governor's Office, and Nasser al Hosni, director-general of Musandam Municipality.

It's the fifth career XTERRA World Tour win for Chane, and the third for Menditto.

In the men's elite race, Chane, who is one of the fastest swimmers on the XTERRA global circuit, was surprised to see a fellow competitor put more than a minute on him during the swim.

"From the gun a really fast swimmer just took off, and I tried to follow but had to pace myself ahead of a day in the heat. Luckily, he was competing for a relay team," he said.

Once on the bike, it was Chane's turn to take off and he did, posting the fastest bike split of the day in 1:12:03 then blitzing the run to take the tape in 2:06:06, more than 14 minutes ahead of Tom Walker from the United Arab Emirates.

Cultural learning experience

"This was totally different from any race I've done before," said Chane, about the first-ever XTERRA race in the Middle East.

"XTERRA is about exploring new cultures and experiences so this ticked every box. Every day here has been a cultural learning experience that I'll never forget."

Gianfranco Cucco from Italy rounded out the top three in his first-race as an elite.

"The purpose built course here in Khasab was great, not too difficult for the local athletes but quite tricky when trying to push hard," said Cucco.

"The sandy rocky ground was just ready to catch you out and ruin your day. Then running in the heat was really tough, but a proper Middle Eastern race experience for sure."

In the women's race, Menditto led from wire-to-wire, posting the fastest swim, bike, and run times to take the win in 2:39:18, more than eight minutes ahead of Ana Celia Creus Del Campo in second. Mia Anna Andersson came in third.

Perfect early season conditions

"It's not every day you get to be the first winner of the first event in a new region," said Menditto. "In five years' time when there are multiple events in the Middle East, it'll be great to be remembered as the first XTERRA Oman Champion."

Menditto also welcomed the hot race conditions, saying it was a perfect early season event to prepare for the XTERRA Asia-Pacific Championship race next month in Kenting.

"I wanted to push hard as preparation for the first XTERRA World Cup event in Taiwan, as the conditions will be similar so I focused on managing my nutrition and hydration while racing as hard as I could in the heat."

The race combined a 1.5km swim in the Sea of Oman with a 30km mountain bike and 10km trail run through Musandam's spectacular desert-mountain terrain.

"The event proved to be a significant success for the Musandam Governorate and Muscat Municipality, as it highlighted Musandam and Oman as a premium destination in the Middle East for hosting world-class, globally-recognised sporting events," said Mohammed bin Khalfan Al Obaidani, CEO, Triathlon Middle East.

The region remains largely "undiscovered" by international tourism, representing the ultimate escape into true Arabian wilderness and rewarding adventurous travelers with cultural charm, ancient history and a range of outdoor activities such as sundowner cruises, dolphin watching trips, and diving with whale sharks and sea turtles.

"We had a fantastic response from the athletes taking part – who were delighted with the stunning natural beauty of the Musandam Peninsula. Our team was also very proud to witness the warm welcome shown by the local Musandam community to all foreign athletes taking part," added Al Obaidani.

XTERRA Oman was the second of 20 events in 14 countries on the 2023 XTERRA EMEA Tour, dishing out qualifying spots into both the XTERRA Triathlon and XTERRA Trail Run World Championship races, and US$23,000 in prize money - US$16,000 purse for the full-distance triathlon and US$7,000 for the half marathon.-

(With inputs from www.xterraplanet.com)

MEETING

Royal Office Minister holds talks with envoy of Syria

MUSCAT: Gen. Sultan Mohammed Al Nu'amani, Minister of the Royal Office, received here on Monday Dr. Idris Maya, Ambassador of the Syrian Arab Republic to the Sultanate of Oman.

During the meeting, the two sides reviewed the march of relations between Oman and Syria. They also touched on joint areas of cooperation and means of enhancing them.

Furthermore, the two sides discussed several matters of mutual interest. -ONA

CIVIL AVIATION AUTHORITY PRESS BRIEFING

Muscat International Airport sees significant increase in air traffic

< FROM A1 The aviation sector witnessed a noticeable increase in terms of passenger traffic, freight traffic, and the number of inbound and outbound flights compared to 2021."

Al Abri added: There was a significant increase in air traffic through Muscat International Airport during 2022, going up by 87 percent, as the number of flights reached 76,392. The number of passengers also grew by 129 percent as more than 8,602,000 passengers travelled through the airport, while freight traffic rose by 34 percent."

The CAA chief said that the total revenues generated during 2022 was OMR72,043,292, an increase of OMR26,430,818 signalling a 58 percent surge. "We also witnessed an increase in the expense rate, which stood at about OMR221,000, comprising one percent compared to 2021," he added.

Al Abri said that Sohar Airport witnessed a 28 percent increase in air traffic during 2022 and a 122 percent increase in the number of passengers. Duqm Airport witnessed a 37 percent increase in the number of passengers, while aircraft traffic decreased by 21 percent.

Open skies agreements

The CAA top official said: "There has been an increase in the number of open skies agreements over 2022, reaching 66 agreements with 122 countries. The total number of flight permits issued were 10,962.

The total air traffic in Oman during 2022 reached 470,809 flights, while the total number of aircraft crossing the Omani airspace reached 386,391 flights.

Al Abri added that the renewed aircrafts in Oman during 2022 stood at 83 airplanes while 11 new aircrafts were registered aircraft, and 83 licenses issued for drone activities.

Among the authority's other achievements during 2022 were the adoption of the national plan for aviation safety, a project to install a hydrogen generator, establishment of an automatic meteorological station in the Wilayat of Barka, and identifying tsunami risk areas for the cell broadcast system.

Al Abri said: "Among the key projects this year are the implementation of the first phase of construction of Musandam Airport project (consultancy studies), refurbishment of the southern runway at Muscat International Airport, and updating of the National Civil Aviation Strategy 2040."

As for the fares of air tickets, the CAA chief said "there are some incentives for citizens in the domestic flights, on Oman Air and SalamAir flights."

He hoped for a new partnership between Oman Air and SalamAir, which may help in reduction of ticket prices.

Abdullah Rashid Al Khadouri, CAA director general of Meteorology, said: The 'Muzn' programme seeks to upgrade the early warning system, train the national human cadres technically and scientifically, and raise the efficiency, accuracy and quality of warnings, alerts, meteorological services and early warning."

He added: "Among the programme's new projects are the modernisation of the satellite system, numerical prediction system, the valley (wadi) overflow prediction project and the installation of Muscat radar, which is expected to be completed in May 2023."

Mubarak Saleh Al Ghailani, CAA general supervisor of air navigation, said: The 'Irtiqaa' programme aims to raise the compliance rate in aviation safety and security indicators. The programme will develop air navigation by modernising air traffic management systems and improving air reconnaissance and communications systems."

Hamid Ahmed Al Barashdi, CAA director general of strategic planning, said: "The 'Ithmaar' programme aims to enhance the investment field in the civil aviation sector, maximise the benefit from infrastructure and contribute to the gross domestic product."

He mentioned that 'Nomu' or 'growth' programme is associated with the national strategy for civil aviation. It aims to review the civil aviation strategy in order to support its alignment with objectives of Oman Vision 2040 and the integrated planning between the components of the sector in a bid to raise the level of operational efficiencies, quality and traffic growth.

Zahraa Saif Al Manji, CAA director general of support services, said: "The 'Kafa'aat' or 'competency' project will help in building strategic partnerships with public sector institutions and government companies, and also develop human capacities in specialised jobs."

Munira Mohammed Al Raisi, CAA director of information technology, said: "Digitisation programme aims to develop the digital transformation at the authority. There are several strategic objectives of the programme that include raising the ranking of the Sultanate of Oman in evaluating the e-services development index and ensuring the sustainability and continuity of the digital business environment within the authority."

RESIDENTIAL AREAS

< FROM A1 Problem of aircraft noise

He said: "One of the measures would involve changing aircraft routes as we are aware that there is a problem of aircraft noise affecting the residential areas surrounding Muscat International Airport, in particular, Al Mawaleh area."

"We have held consultations to address the issue and one of the options is diverting the planes' landing path between 9 pm to 7 am. Exceptions have to be made in case of weather conditions that would require the aircraft to land through the normal route."

Al Barashdi emphasised that the authority will spare no efforts in finding a solution to the aircraft noise that affects the residents in the surrounding areas.

He said: "Wide-bodied aircraft are prevented from landing in the evening times while we are also refurbishing the southern runway."

Al Barashdi concluded "Controlling where planes fly during take-off and landing has an important impact on noise pollution. We are committed to reducing noise impact and the environmental concerns affecting population to ensure sustainability of commercial aviation."

WORLD

MUSCAT FINANCE (S.A.O.G)

P.O.Box 888, PC 112 Sultanate of Oman

AUDITED FINANCIALS FOR THE YEAR ENDED DECEMBER 2022

Director's Report 2022

Dear Shareholders,

On behalf of the Board of Directors, I am pleased to present the Annual Report for the year ended December 31, 2022.

The Oman budget for the year 2023 prepared in accordance with Oman Vision 2040 and the Tenth Five-years development plan (2021-2025), which aims to ensure financial economic and social stability. Muscat Finance is aligning its strategic direction in accordance with the Oman Budget 2023 & Sultanate's vision 2040. This will translate into a wider opportunity for Muscat Finance SAOG and the finance sector in general.

Business Results

The oil price drop in 2020 and the aftermath of Covid 19 and the recent sharp increase in the interest rate by the FED all had their contribution to a difficult operating environment. Your company posted a net profit before tax of RO 1.4 mill during the year 2022, before loss of litigation of RO 1.5 Million which is 3% higher than previous year. During the year 2022 MF has lost the case filed by the customer and paid RO 1.5 Mill. The same is provided as loss of litigation in the year 2022.

Net operating income decreased by 6% over the previous year to RO 6.3 Mill, while operating profit decreased by 16% to RO 2.6 Mill.

Liquidity:

Despite the above, your company continues to generate strong operating cash flows. During the year 2022, your company generated RO 5.79 mill as net cash flow from operating activities, much of which was utilized to reduce liabilities with banks and depositors from RO 62 mill as of Dec 2021 to RO 58 mill by end of year. Your company invested RO 1 Million in Government Bonds.

Muscat Finance continued its conservative approach towards new advances in corporate sector. In Retail finance, opportunities for lending were capitalized both through our dealership referral network as well as through direct marketing channels. While the market experienced new car stock shortages in the recent past due to supply chain disruptions, the local buyers/consumers continue to turn to the pre-approved second hand car markets for their needs.

Strategy:

The company continued to hold its usual Strategy workshop. As a consequence of the fast changing environment, your company had several meetings to discuss the budget for 2023 and also its strategic direction for the coming years. As part of its ongoing strategy, the company made an effort to diversify its sources of funding by reducing bank borrowings and growing its corporate deposits during the year.

The company continued its focus on collection efforts to bring down the NPAs. The company continues to use all legal remedies available to recover non-performing loans and deal with the stress account by offering suitable tenor to match with their cash-flow for genuine cases that are affected by the affects of short term economic downturn.

As part of your company's new strategy, a new Head Office has been identified. The move is expected to bring long term cost saving and efficiency improvement that will translate to a better service to our customers at the right price.

A detailed review of the operational results of the Company has been covered in the Management Discussion and Analysis Report.

Capital Management & Dividend

The company has a solid capital base and above the minimum stipulated capital requirement by CBO of RO 25 Million. Your company decided voluntarily to preserve its capital and bring down its gearing level to overcome any short term economic shocks expected in liquidity and interest rates due to post Covid 19 era and any expected fluctuations in oil price.

Your company, utilised part of the legal reserve to extinguish the retained losses in the balance sheet.

The Company's history of dividend payments over the last 5 years is as follows:

Year	Cash Dividend %	Stock Dividend %	Total %
2017	8.00	5.00	13.00
2018	6.25	2.50	8.75
2019	-	-	-
2020	-	-	-
2021	-	-	-
2022	-	-	-

Change in the Composition of the Board

During the year, one member of the Board resigned and the respective juristic person has filled the vacancy by replacement. Mr. Kailesh Girdharlal Bavishi has been replaced by Mr.Mohamed Amer Mohamed Elmettwaly Satur to the Company through the Board.

Rating Update

Capital Intelligence, an independent credit rating agency, which has been rating our company in the past, has maintained a National Scale rating of omA- Long Term and A2 Short Term based on the financial statements for the quarter ended September 2022.

Awards and achievements:

Your company received an award from Oman Economic Review in recognition for Pioneering success over the last 35 years.

HR and Our People

The company continues to invest in building local talent with Omanisation ratio standing at 88.3% as at year end. This is well above the 80% requirement of the Central Bank of Oman. Your company continues to identify suitable candidates to pursue ACCA program and CAAT programs.

Your company continues to explore qualification that will enhance the skills of its people to deliver improved productivity, efficiency and control in a way that will safeguard its assets and deliver a better service to its customers at the right price.

During the year, at the time of contract renewal discussion, Fahd bin Amjad as DCEO decided not to renew his contract with the company to pursue an attractive opportunity outside of Oman.

Your company has a new management team under the leadership of the CEO, Mr Hussain Al Lawati.

Information Technology

The company is looking ahead to build stronger digital capabilities as part of a larger digital transformation mandate. The company has upgraded its core financial management ERP system last year.

Corporate Social Responsibility

Your company acknowledges its responsibility towards contributing to the community, stemming from its strong belief that the society at large is the reason for the success of Muscat Finance.

The company aims to continue to discharge its social responsibilities in a manner that provides sustainable benefit to the community, year after year.

At Miscat Finance, we know that Corporate Social Responsibility is essential to our current as well as future success as a business.

The company has contributed for buying a medical equipment which will be useful for patients in Emergency situations in Khoula hospital. The company also contributed to Oman Chamber of Commerce & Industry for promoting goods "Made in Oman" and participated in their initiatives during the Holy month of Ramadhan.

Your company is also developing sustainable strategies to enhance finance towards green energy to as a positive contribution towards reducing carbon footprints of our funding.

Corporate Governance

Your Company has always supported the highest levels of Corporate Governance. Details of our Corporate Governance philosophy and processes are described in the Corporate Governance Report included in the Annual Report.

Business outlook for 2023

Government's fiscal prudence, supportive crude prices and progressive Vision 2040 has started to bear fruits. The sovreign rating and its outlook have witnessed improvement fron major global rating agencies. This has created multitude of opportunities for the country and its inhabitants. We are optimistic about the prospects and have aligned our strategic direction with Oman's Budget 2023 & Oman's Vision 2040, whih are supportive of growth and development. We expect to leverage on this momentum by strengthening our retail books andwill also continue with conservative growth opportunities in corporate lending segment.

Acknowledgement

On behalf of the Board and the company, I would like to express our sincere gratitude and best wishes to His Majesty Sultan Haitham Bin Tariq to lead the Sultanate of Oman with his wisdom and vision, towards a path of prosperity.

I would like to thank His Majesty's Government, the Central Bank of Oman, the Capital Market Authority and other Authorities for their continued support and guidance. We are also grateful to our management, staff and all our customers for their continued patronage and support, to our local and overseas bankers for their active co-operation, and to all the shareholders for the conidence reposed in its Board.

On behalf of the Board of Directors

Faisal bin Mohamed Al Yousef
CHAIRMAN

Statement of Financial Position As at 31 December 2022

	Dec 22 RO '000	Dec 21 RO '000
Assets		
Debtors arising from financing activities	98,792	104,539
Cash & Bank balances	1,574	888
Other assets	2,577	1,037
	102,943	106,464
Liabilities		
Bank borrowings & Corp.Deposit	58,101	62,194
Creditors & other liabilities	6,577	6,541
	64,678	68,735
Net Assets	38,265	37,729
Shareholders' funds		
Share capital	30,715	30,715
Legal reserve	3,098	7,077
Impairment reserve	3,955	3,955
Cumulative changes in fair value	-	16
Retained Earnings	497	(4,034)
	38,265	37,729

Satement of Comprehensive Income for the Year ended 31 December 2022

	Dec 22 RO '000	Dec 21 RO '000
Lease and Interest income	9,030	9,856
Interest expense	(3,358)	(3,922)
Net interest income	5,672	5,934
Other Income	654	768
Operating Expenses	(3,697)	(3,590)
Provision for Impairment	(1,227)	(1,751)
Loss on Litigation	(1,500)	-
Profit / (Loss) before taxation	(98)	1,361
Provision for taxation	650	(188)
Profit /(Loss) for the period	552	1,173

NOTE :- The complete accounts will be sent by mail to any shareholder or other interested party who requests them, a either Arabic or English, within 7 days of such request addressed to:
Chief Executive Officer
Muscat Finance (SAOG)
P.O.Box 888, PC 112 Sultanate of Oman

OFFERS

Bangladesh ports' use

DHAKA: Stressing on the need for enhancing regional connectivity for boosting trade and commerce, Bangladesh Prime Minister Sheikh Hasina has offered the use of Chattogram and Sylhet ports to India, according to report by Bangladesh's National News Agency Bangladesh Sangbad Sangstha (BSS). -ANI

Times OF OMAN

Printed and published by:
Muscat Media Group
Post Box: 770,
Postal Code: 112

Founder: Essa bin Mohammed Al Zedjali
Chairman / Editor-in-Chief: Mohamed Issa Al Zadjali
Deputy Editor-in-Chief: Anees bin Essa Al Zedjali
Chief Executive Officer: Ahmed Essa Al Zedjali

EDITORIAL: Telephone: 24726666, Fax: 24813153, E-mail: editor@timesofoman.com
ADVERTISING: Telephone: 24726666, Fax: 24812624, E-mail: advertising@timesofoman.com
CIRCULATION: Telephone: 24726666, Fax: 24818270, E-mail: circulation@timesofoman.com

THAW IN TIES

Iran's president to visit Saudi Arabia for talks

TEHRAN: Iranian President Ebrahim Raisi on Sunday "welcomed" an invitation from Saudi Arabia's King Salman to visit the country, an Iranian official said.

"In a letter to President Raisi... the King of Saudi Arabia welcomed the deal between the two brotherly countries, [and] invited him to Riyadh," Mohammad Jamshidi, the Iranian president's deputy chief of staff for political affairs, wrote on Twitter.

Also on Sunday, Iranian Foreign Minister Hossein Amirabdollahian said that Tehran had suggested three locations for a meeting with his Saudi counterpart.

"An agreement was reached two months ago for Iranian and Bahraini technical delegations to visit the embassies of the two countries," he said.

"We hope that some obstacles between Iran and Bahrain will be removed and we will take basic steps to reopen the embassies."

Iran and Saudi Arabia agreed to re-establish relations and reopen embassies on March 10 in a deal brokered by China.

The two countries have for many years vied for supremacy in the Middle East, supporting rival factions in the wars in Yemen and Syria. Meanwhile, Iraq and Iran signed a deal aimed at tightening border security, officials have said. -DW

MASTER'S PROGRAMME

Afghan female student wins gold medal

NEW DELHI: A 27-year-old female student from Afghanistan, a country where women are struggling for human rights, has won a gold medal for her performance in a master's programme in a college in India, VOA reported.

She has dedicated this medal to all the Afghan women who were denied higher education. On achieving this feat, her thoughts flashed back to her homeland, which was taken over by the Taliban in 2021 and where it is more than normal for a woman to pursue her dreams. The future was bright when she was growing up in the Afghanistan Bamiyan area. She pursued her bachelor's degree while working during the day and attending classes at night.

Life was peaceful and normal, Muradi told VOA.

She arrived in India two years ago on a scholarship to pursue a master's degree in public administration. She was one of the tens of thousands of Afghans who have attended Indian colleges over the past twenty years since 2001.-ANI

Sultanate of Oman
Consumer Protection Authority

Zawawi Trading Company L.L.C.

Recall Campaign for Mercedes-Benz GLE/GLS (167 platform) Model year: 2012-2020

Date of Campaign: 21.03.2023
Recall Segment: Mechanical
Recall Type: Safety

Product Description:

No. of vehicles	Chassis number	To	Chassis number	Sales Designation
11	WDC2923641A028981	To	WDC2923641A041494	Mercedes-AMG GLE 450 4MATIC Coupé
102	WDC2923641A058651	To	WDC2923641A154021	Mercedes-AMG GLE 43 4MATIC Coupé
53	WDC2923751A003655	To	WDC2923751A132426	Mercedes-AMG GLE 63 S 4MATIC Coupé
6	4JG2923641A070673	To	4JG2923641A141549	Mercedes-AMG GLE 43 4MATIC Coupé
2	4JG2923641A011214	To	4JG2923641A019837	Mercedes-AMG GLE 450 4MATIC Coupé
5	4JG1660581A635073	To	4JG1660581A965655	GLE 350
64	WDC1660561A440732	To	WDC1660561A616108	ML 400 4MATIC
222	WDC1660561A626499	To	WDC1660561B149176	GLE 400 4MATIC
119	WDC1660571A043438	To	WDC1660571A422752	ML 350 4MATIC
30	WDC1660731A042937	To	WDC1660731A476001	ML 500 4MATIC
3	WDC1660731A629418	To	WDC1660731A739805	GLE 500 4MATIC
9	WDC1660741A091673	To	WDC1660741A524208	Mercedes-AMG ML 63 4MATIC
3	WDC1660751A628410	To	WDC1660751B002497	Mercedes-AMG GLE 63 S 4MATIC
1	4JG1660571A101269			ML 350 4MATIC
1	4JG1660571B148542			GLE 350 4MATIC
1	4JG1660641A919994			Mercedes-AMG GLE 43 4MATIC

Description of defect:
Mercedes-Benz AG has determined that on GLE/ML (166 platform) and GLE Coupe (292 platform) vehicles, water might permeate into the rear area of the vehicle and, over time, accumulate in the spare wheel well. In certain driving situations, accumulated water could briefly come into contact with the fuel pump control unit. Consequently, the fuel supply to the engine could be impaired, which would lead to a loss of propulsion without pre-warning.

Procedure:
As a precautionary measure Zawawi Trading Company will install a water drain plug in the spare wheel well on the affected vehicles, check for water infiltration into the spare wheel well and replace the fuel pump control unit, if necessary. The expected workshop visit for the check and the installation of the water drain plug will take approximately 30 minutes. If a replacement of the fuel pump control unit is necessary, this will take up to 1 hour. For hybrid variants, this replacement will take up to 5 hours and will be free of charge.

For more information:
Sultanate of Oman customers affected by the recall who have not been contacted already will be telephoned by representatives of Zawawi Trading Company LLC, so thay they can arrange a convenient time from 21.03.2023 to get their car inspected.

Contact details:
Toll free number: 80079777 on all working days between 08:00 to 17:30 hrs with effect from 21.03.2023.

Mercedes-Benz

PM FUMIO KISHIDA

'Japan will expand cooperation for Free, Open Indo-Pacific'

NEW DELHI: Terming India an "indispensable partner", Japanese Prime Minister Fumio Kishida said that Japan will expand cooperation for a Free and Open Indo-Pacific, adding that it is mportant to lead the international community in the direction of cooperation rather than confrontation and division.

"India is an indispensable partner and I believe India and Japan are in an extremely unique position in the current International relations and further in the history of the world. India is the largest democracy in the world. I have always viewed with great respect the way such a huge and diverse country as India has developed a democracy," he said while delivering the 41st Sapru House Lecture.

He recalled that former Japanese PM Shinzo Abe in 2016 delivered a vision called Free and Open Pacific (FOIP).

"Japan will expand cooperation for FOIP. Russia's aggression against Ukraine oblige us to face the most fundamental challenge defending peace," Fumio Kishida said.

Kishida stressed that the vision will be nurtured by the voices of different nations can be characterised as a Free and Open Indo-Pacific. He called it important to lead the international community in the direction of cooperation rather than confrontation and division.

"I believe that this vision nurtured by the voices of different countries which can be characterised as our Free and Open Indo-Pacific. It's becoming more important than ever towards the goal of leading the International community in the direction of cooperation rather than division and confrontation," Kishida said.

Fumio Kishida said that Japan will collaborate closely with India in contributing to stability in the South Asian region.

He emphasised that Japan will promote the Bay of Bengal - North East India industrial value concept in cooperation with India and Bangladesh. He stated that Japan is looking at economic partnership with Bangladesh.

"Japan will collaborate closely with India in contributing to stability in the South Asian region... Northeast India which is surrounded by land still has unexploited economic potential. We will promote Bay of Bengal- North East India Industrial value chain concept in cooperation with India and Bangladesh to foster the growth of the entire region," Kishida said.

"India's neighbour Bangladesh will soon graduate from being classified as a least developed country. We have already launched the joint study group on the possibility of an economic partnership agreement with Bangladesh," he added.

-ANI

MEDIATION

Xi Jinping arrives in Moscow for talks with President Putin

MOSCOW: At the invitation of Russian President Vladimir Putin, Chinese President Xi Jinping arrived here on Monday afternoon for a state visit to Russia through Wednesday.

A grand welcoming ceremony was held upon Xi's arrival.

In a written statement, Xi said that he looks forward to having an in-depth exchange of views with Putin on bilateral ties and major international and regional issues of shared interest, to draw a blueprint for China-Russia strategic coordination and practical cooperation in the new era.

Xi said that he is confident that the visit will produce fruitful results, and inject fresh impetus into the sound and steady growth of China-Russia comprehensive strategic partnership of coordination for a new era.

Noting that China and Russia are friendly neighbours connected by shared mountains and rivers, Xi said that 10 years ago, he paid his first state visit to Russia as Chinese president, and together with Putin, opened a new chapter in the all-round development of China-Russia relations.

Over the past decade, the two countries have consolidated and grown the bilateral relationship on the basis of no-alliance, no-confrontation and not targeting any third party, and set a fine example for developing a new model of major-country relations featuring mutual respect, peaceful coexistence and win-win cooperation, Xi said, adding that both countries have deepened political mutual trust, expanded practical cooperation, maintained close and effective international collaboration, and forged a long-standing friendship between their peoples.

The growth of China-Russia relations has not only brought tangible benefits to the people of both countries, but also made important contributions to the development and progress of the world, noted the Chinese president.

In a world of volatility and transformation, China will continue to work with Russia to safeguard the international system with the UN at its core, the international order underpinned by international law, and the basic norms of international relations based on the purposes and principles of the UN Charter, he said.

— Xinhua

Tender Announcement

Dhofar Integrated Services Company S.A.O.C (DISC) invites the specialize companies to participate and submit their best offer for the below said tender in Dhofar Governorate.

Tender Number	Tender Name	Last Date for Collection of Tender Documents	Time & Last Date for Proposal Submission	Tender Fee (OMR) Including VAT (5%)
DISC/ 2023/042	Construction of 11KV Outgoing Feeders from Al MUROOJ PSS	4th April 2023	12th April 2023	RO. 105.000
DISC/ 2023/043	Construction of 11KV Outgoing Feeders from SHALNOOT-III PSS	4th April 2023	12th April 2023	RO. 105.000

- To view the tender details, you can visit www.disc.nama.om / scan the QR code
- The deposit at the last day of purchasing should be before 3.00pm.
- Bids shall be submitted online through using "isupplier portal". No hard copies are accepted.
- The company is not obliged to accept the lowest or any other bid.
- In the event of receipt of the tender document on behalf of another company, the interested purchasers in the above tender document should provide details of the person's name and the company details.
- **For any clarifications contact us on: • Tel No. 23232554 • email: purchase@disc.nama.om**

شركة ظفار للخدمات المدمجة
Dhofar Integrated Services Company
إحدى شركات مجموعة نماء
Member of Nama Group

Dhofar Integrated Services Company S.A.O.C
P.O.Box: 2609, P.C.: 211, Salalah, Sultanate of Oman
Phone Number: +968 23232523 - Fax: 23201183
www.disc.nama.om

SPORTS

NZ trounce Sri Lanka to complete series sweep

Hosts registered an innings and 58-run victory to win the Test series 2-0

WELLINGTON: New Zealand completed an innings and 58-run victory over Sri Lanka on the fourth day of the second Test in Wellington on Monday to sweep the series 2-0.

Asked to follow on, Sri Lanka needed 416 runs to make the host bat again but were bowled out for 358 in its second innings at the Basin Reserve.

New Zealand completed their third Test win in succession after claiming the thrilling series-opener by two wickets on the last ball in Christchurch and earlier beating England by one run in another cliffhanger in Wellington.

Sri Lanka's hopes of a first win in the country since 2006 all but ended when its batters managed only 164 in reply to New Zealand's declared first innings total of 580 for four.

In the second innings, Sri Lanka resumed on 113 for two in the morning. Four batters made half-centuries, and No.6 Dhananjaya de Silva ploughed on to the cusp of a century by tea.

However, a wicket before and after the tea break, including De Silva's dismissal for 98 with a botched scoop off Michael Bracewell, put the game back in New Zealand's hands as Sri Lanka fell to 318 for seven.

Tailenders Prabath Jayasuriya and Kasun Rajitha did well to soak up an hour before Jayasuriya top-edged a pull-shot off the spin of Bracewell to be out for two off 45 balls.

Lahiru Kumara joined Rajitha in the blocking mission, and New Zealand grew frustrated as the pair resisted for nearly 16 overs.

Paceman-captain Tim Southee finally yielded the breakthrough when Kumara edged to Bracewell in the slips to be out for seven.

New Zealand were granted extra overs to capture the final wicket, but it was more a race against failing light than trying to beat the clock.

Rajitha soon nibbled at a Southee (3-51) delivery and sent an edge to the slips, where Kane Williamson ended the batter's 110-ball vigil for 20 to wrap up the match.

Captain and opener Dimuth Karunaratne top-edged a pull off Southee to be out for 51 late on day three, while No.3 Kusal Mendis was dismissed off Matt Henry for 50 on Monday morning. Dinesh Chandimal scored 62 before top-edging Tickner, who finished with 3-84 for the innings.

Brief scores: New Zealand 580-4 decl. beat Sri Lanka 164 and 358 (Dhananjaya de Silva 98, Dinesh Chandimal 62, Dimuth Karunaratne 51, Kusal Mendis 50; Tim Southee 3-51, Blair Tickner 3-84).

OMAN CRICKET

Fagor are champs

MUSCAT: Fagor FCC defeated Orient Travels by 21 runs to lift the Oman Cricket A Division T20 title on Saturday and complete a grand double in domestic cricket. Fagor had claimed the A Division 50-over-a-side title last month

In the T20 final, batting first, Fagor FCC scored 147 for nine. Chirag Mandaviya (48 of 47; 1x4, 3x6) and Sultan Ahmed (43 of 30; 6x4) shared a crucial 68-run third wicket partnership. Tanveer Rana (3/38), Tauseef Ahmed (2/13) and Mudassar Qayyum (2/28) were among the wickets.

In their chase, Orient Travels lost wickets at regular intervals. Syed Amir Ali's (45 of 27; 5x4, 2x6) was the only notable contributor. Aneermon and Charles Jacob claimed three wickets each.

Mandaviya of Fagor FCC was adjudged the man of the match.

After the title win, Fagor FCC Parameswaran Shankar said, "Our team has been brilliant in all the departments of the game.

"We have played as a unit and showed aggressive intent throughout the tournament. Our team composition relies on experienced players who contributed to the winning cause. To be winners in both formats is certainly an achievement and a record we all will cherish for a very long time."

Arvind Venkatramani, chief finance officer, Khimji Ramdas Infrastructure, and Duleep Mendis, chief development officer, Oman Cricket, presented the awards to the top two teams.

SPANISH LEAGUE

Barcelona edge Real Madrid in El Clasico

MADRID: Franck Kessie scored an injury-time goal that gave Barcelona a 2-1 win against Real Madrid in a thrilling El Clasico at the Camp Nou Stadium to put his side 12 points clear of Madrid at the top of La Liga with 12 games left.

Kessie's goal finished a thrilling match that saw Real Madrid take an early lead. Real were close to a winning goal in a chaotic last 10 minutes, as Marco Asensio had an effort ruled out for a tight offside.

Barcelona started strongly and Thibaut Courtois had to make two flying saves in the first five minutes to deny Robert Lewandowski's effort from outside the area, and then Raphinha's diagonal header after a cross from Alejandro Balde.

Real Madrid took advantage of Courtois' saves and a dose of fortune as Vinicius Jr took a pass from Eduardo Camavinga and got to the byline. There was nobody waiting for his cross, but it flicked off Ronald Araujo's forehead to completely wrongfoot Marc-Andre ter Stegen and limp over the goal-line to put the visitors ahead in the ninth minute.

Fortune smiled on Barca in the last action of the first half when Sergi Roberto equalised after a move in which Raphinha kicked clean air, Lewandowski's shot was blocked and the ball fell for the midfielder to fire past Courtois, who this time could do nothing. - Xinhua

FORMULA ONE

Perez clinches F1 Saudi Arabian GP

RIYADH: Red Bull's Sergio Perez took victory in Sunday's Formula One Saudi Arabian Grand Prix, as teammate Max Verstappen salvaged second place after starting 15th. Starting from pole position, Perez lost out to Fernando Alonso at the first corner, but regained the lead on Lap 4 and was never headed as he took his fifth career win and his first since last season's Monaco Grand Prix.

Verstappen had started the race well down the order after a driveshaft issue had ruined his qualifying session, but a Safety Car period on Lap 18 helped him vault up the order, and the Dutchman was up to second place behind Perez by Lap 25.

Verstappen complained about problems with his driveshaft late in the race, and though the Dutchman managed to bring the car home and set the race's fastest lap, he never came within four seconds of Perez.

Behind the Red Bulls, Fernando Alonso took his second consecutive third place finish, though the Spaniard was made to sweat on the result as stewards initially demoted him to fourth for not having served a five-second time penalty correctly earlier in the race.

Having been issued with the penalty for not starting from the correct position in his grid slot, Alonso served it during his first pit stop, but stewards adjudged that Aston Martin's mechanics had touched the car before the five seconds had elapsed, handing him a further ten-second penalty that dropped him to fourth.

However, Aston Martin successfully argued that there were examples of other drivers not being penalised for similar offences, and the stewards reinstated Alonso's third place.

Behind the top three, George Russell and Lewis Hamilton took fourth and fifth for Mercedes, ahead of the twin Ferraris of Carlos Sainz and Charles Leclerc.

Esteban Ocon and Pierre Gasly finished eighth and ninth for Alpine, with Kevin Magnussen rounding out the top ten in his Haas. Despite failing to win, Verstappen still leads the championship standings with 44 points, with Perez just a single point adrift, and Alonso third with 30.

In the Constructors' Championship, Red Bull lead the way with 87 points. - Xinhua

TENNEX BALL CRICKET

Al Hail CC to host Ramadan tournament

MUSCAT: Al Hail Cricket Club will host the fourth edition of the Ramadan Premier League Tennex ball tournament 2023 at the Al Hail Cricket Ground in Mabela from March 24.

The matches will be played on a league basis with participation limited to 16 teams.

The tournament is open to all the teams that play in Oman Cricket 'A' and lower divisions. Cash prizes will be on offer for the winners and runners-up teams besides prizes for best batter and fair play award.

All the matches will start at 9:30 pm. Interested teams can register through the following website www.alhailcricketclub.com. The tournament draw will take place at the venue on March 21 in the presence of the team captains and managers.

MARKET
BUSINESS & FINANCE

OMAN CRUDE PRICE FALLS

The price of Oman oil has decreased, with prices for delivery by May 2023 reaching $70.35, said Dubai Mercantile Exchange (DME). The DME statement said that the price of Oman oil fell by $4.58 from the price of Friday, which was $74.93. - ONA

MSX INDEX ENDS LOWER

The MSX index closed at 4,860.01 points, down by 0.24 per cent from the previous close. The Sharia Index ended down by 0.72 per cent at 477.09 points. Al Madina Investments, up 20.00 per cent, was the top gainer while Takaful Oman, down 9.30 per cent, was the top loser.

Global banking crisis unlikely to affect GCC banks: Moody's

Broad franchises and large government presence on banks' balance sheet shield their financial performance from shocks, Moody's said

REPORT: GCC banks are not materially exposed to the banks and are not as susceptible to large losses from held-to-maturity debt securities. - Photo used for illustrative purpose only

Times News Service

MUSCAT: With the spillover effects of the US bank distress still developing, however, the impact will likely be limited for most rated banks in the Gulf Cooperation Council (GCC) region, according to a new report. "This is due to structural features including their broad franchises and large government presence across the banks' balance sheets," the global credit rating agency Moody's said.

"Also, GCC banks are not materially exposed to the banks and are not as susceptible to large losses from held-to-maturity debt securities," the report further stated.

Broad franchises and large government presence on banks' balance sheets shield their financial performance from shocks, the credit rating agency said.

Banks in the six nations of the Gulf Cooperation Council generally have broad franchises across retail and corporate banking. GCC banks are strongly interlinked with their respective sovereigns. For the most part, the footprint of governments in the region can be found right across banks' balance sheets - as borrowers, depositors and main shareholders, creating a supportive and interlinked operating environment.

The report further said that most GCC governments are highly rated and they maintain equity stakes in the banking systems, both directly and indirectly through public-sector institutions, pension funds and companies. They anchor the banks' funding profiles through inflows of stable deposits, which have increased thanks to higher oil-related government revenues in 2022.

Governments also provide lending opportunities to GCC banks that are playing a pivotal role in implementing the government's economic diversification agendas in the non-oil parts of the economy - where they conduct the bulk of their lending activities – which are supported by government spending, notably in Saudi Arabia.

All these factors ensure GCC banks remain core to the regional economies and will protect them against sudden market shocks.

Stable customer deposits

Also, the report said that the GCC banks remain largely funded by deposits, with sizeable government deposit concentration. The GCC banks are largely funded by low-cost and stable customer deposits representing around three-quarters of non-equity liabilities. Gulf economies are dominated by the governments, their related entities and a few large family-owned conglomerates, leading to significant deposit concentrations.

Government and public-sector deposits average around 30 per cent of total deposits as of December 2022 across the GCC banking systems.

However, these governments and public-sector entities have a strong track record as stable depositors even in bad times, such as the oil crisis in 2015 and the COVID-19 outbreak. The economic interests of these parties are therefore closely linked.

Furthermore, Islamic finance is growing rapidly across GCC banking systems. Deposits at these banks are lower cost than at conventional banks and support the banks' profitability, particularly at times of high-interest rates.

Saudi Arabia remains the largest Islamic banking franchise, where quasi-zero-cost deposits account for 55 per cent of total deposits (Islamic and conventional) as of year-end 2022.

The Credit rating agency Moody's further said that the stable related party funding at these banks, combined with shareholder structures dominated by a concentrated pool of state-linked entities and groups, limit the risk of deposits run-off and protects them against the kind of asset-liability risks exacerbated by rising interest rates in the current context.

Solid liquidity buffers and modest reliance on more volatile market funding are key strengths

GCC banks hold ample liquidity buffers and their reliance on confidence-sensitive market funding is modest. Their liquid assets to total assets range between 22 per cent and 38 per cent and they exceed Basel III liquidity coverage and net stable funding ratios.

"We expect banks' recourse to more volatile market funding to remain stable, averaging around 20 per cent of tangible banking assets, except in Saudi Arabia where the banks will likely seek additional market funding in light of substantial credit demand," Moody's said in its report.

NEW GENERATION OF AI

Seminar sheds light on investment opportunities through AI-based platforms

MUSCAT: The Ministry of Transport, Communications and Information Technology held a seminar on the new generation of artificial intelligence (AI).

The event aimed to highlight the most prominent policies regulating the use of modern technologies. It also shed light on investment opportunities through AI-based platforms, in addition to coming up with recommendations and a clear message to society on all aspects related to new AI technologies.

The opening ceremony of the seminar was held under the auspices of Dr Khalifa Abdullah Al Barwani, CEO of the National Centre of Statistics and Information (NCSI).

During the event, Dr Ali Amer Al Shidhani, Undersecretary of the Ministry of Transport, Communications and Information Technology for Communications and Information Technology pointed out that the seminar is one of the initiatives of the executive programme for artificial intelligence and advanced technologies. -ONA

TIBIAAN PROPERTIES

Contract signed to develop and market new commercial development in Salalah

Times News Service

MUSCAT: Tibiaan Properties and Al Tamman Real Estate Company, a subsidiary of Muscat Overseas Group, have signed a contract to develop and market the first commercial development of its kind exceeding an investment amount of OMR8 million in the Dhofar Governorate in the Al Saada area, Salalah.

'Ajwaa' project will include commercial units dedicated to various activities such as office spaces, retail spaces, restaurants, cafes, etc.

This cooperation comes into place to deliver premium projects in Dhofar Governorate, where demand is rising for quality real estate projects. The project name 'Ajwaa' is an Arabic word that refers to the beautiful weather Salalah is enjoying throughout the year, thus reflecting the opportunities this project offers to investors in both corporate and individual capacities.

The project location was carefully selected within one of the most active areas in Salalah directly on Sultan Taimur Street in Al Saada, with an easily accessible route to all parts of Salalah.

Ajwaa will represent a distinctive investment destination, as it will allow individuals and institutions the opportunity to own a commercial space for their own business or to rent it and obtain returns from it. It will be designed on a land area of more than 20,000 square metres and includes more than 220 various commercial spaces making it an integrated commercial destination for work and leisure alike.

Himansu Mohapatra, General Manager of Al Tamman Real Estate, mentioned, "Al Tamman Real Estate is a major real estate developer in Oman, and we announce our new project in Salalah – Ajwaa – which comes to enrich the market with quality and innovation which meets the demand expectations."

Speaking about the location and design Himansu added: "What distinguishes the project, in addition to its strategic location, is its distinctive design that comes following the highest technical and aesthetic specifications, in addition to designing smooth exits and entrances for the audience."

Younis Al Harrasi, CEO of Tibiaan Properties, said, "We are pleased to announce the cooperation of our first project in the Wilayat of Salalah with Al Tamman Real Estate Company, where we have studied the project importance and value addition to the Governorate of Dhofar starting from identifying the land location to creating the best mix of commercial units which will serve the community."

"This project comes in line with our direction to expand our presence all over the Sultanate to deliver real estate solutions and a wider range of investment opportunities after a journey that extends to over 20 years of real estate services in Oman. We are proud to work alongside a well-known real estate developer who has a proven record of distinguished projects of high quality and delivery standards," Al Harrasi added.

INITIATIVES

Workshop reviews job localisation plans in Opaz-affiliated zones

Times News Service

MUSCAT: The Public Authority for Special Economic Zones and Free Zones (Opaz), in cooperation with the Ministry of Labour, organised a workshop aimed at reviewing Opaz performance indicators applied in the affiliated zones related to job localisation plans and the creation of quality jobs in various economic sectors.

The workshop discussed Opaz 2023 initiatives to increase the contribution of the companies operating in its zones in opening direct employment opportunities to the local people and localisation pathways of supervisory and specialised jobs.

During the workshop, participants from the Special Economic Zone of Duqm (Sezad), the Free Zones of Salalah, Sohar, Al Mazuna and various industrial cities were trained in optimal practices to analyse occupations and applications for recruitment of foreign workers in line with the authority's objectives.

SIGNS AGREEMENT

Onsor Technologies Company launches computers equipped with 3D technology

MUSCAT: Onsor Technologies Company, a subsidiary of ITHCA Group, launched computers equipped with 3D technology. It also signed an agreement with American company zSpace to export those computers to the United States of America.

The agreement was signed by Eng. Mu'adh Ahmed Al Hinai, CEO of Onsor Technologies Company and Paul Kellenberger, CEO of zSpace.

This innovative partnership aims to develop and enhance modern technology in various fields, namely education, training, entertainment and industry. The 3D technology in those Onsor computers gives users a unique experience without the need of using 3D glasses.

Al Hinai pointed out that this partnership allows zSpace to develop 3D content, including the development of a realistic training experience for teaching and training faculties at schools, factories and companies in various fields. He affirmed that this new technology will be first introduced in the American market and will be provided soon to users, coinciding with the start of production. -ONA

MARKET

MSX index ends lower

Al Madina Investments, up 20.00 per cent, was the top gainer while Takaful Oman, down 9.30 per cent, was the top loser

MUSCAT: The MSX index closed at 4,860.01 points, down by 0.24 per cent from the previous close. The Sharia Index ended down by 0.72 per cent at 477.09 points. Al Madina Investments, up 20.00 per cent, was the top gainer while Takaful Oman, down 9.30 per cent, was the top loser. Shares of Bank Muscat were the most active in terms of the number of shares traded while Oman Telecom were the most active in terms of turnover.

A total number of 974 trades were executed during the day's trading session, generating a turnover of OMR3.08 million, with more than 9.65 million shares changing hands. Out of 46 traded securities, 12 advanced, 16 declined, and 18 remained unchanged. At the session close, domestic investors were net buyers for OMR151,0000 while GCC & Arab investors were net sellers for OMR76,000, followed by foreign investors for OMR75,000 worth of shares.

Financial Index closed at 7,794.16 points, down 0.24 per cent. Prices of Al Madina Investments, Al Batinah Development Company, Oman & Emirates Investment and Al Madina Takaful were up by 20.00 per cent, 6.90 per cent, 1.21 per cent and 1.11 per cent respectively. Prices of Takaful Oman, Ominvest, United Finance, Oman United Insurance and Oman Arab Bank were up by 9.30 per cent, 1.96 per cent, 1.59 per cent, 1.26 per cent and 0.86 per cent respectively.

Industrial Index closed at 6,121.74 points, down 0.83 per cent. Prices of Al Hassan Engineering, Al Maha Ceramics and Raysut Cement were up by 8.33 per cent, 0.96 per cent and 0.74 per cent respectively. Prices of Gulf Mushroom Products, Oman Cables Industry, A'Saffa Foods, Voltamp Energy and Jazeera Steel Products were up by 8.26 per cent, 6.91 per cent, 5.00 per cent, 1.79 per cent and 0.35 per cent respectively.

Services Index was up by 1.11 per cent before closing at 1,714.39 points. Prices of Al Maha Marketing, Shell Oman Marketing, National Gas, Phoenix Power and SMN Power Holding were up by 7.55 per cent, 6.40 per cent, 2.97 per cent, 1.70 per cent and 0.99 per cent respectively. Prices of OIFC, Renaissance Services, Abraj Energy and Ooredoo were up by 2.44 per cent, 1.44 per cent, 1.34 per cent and 0.96 per cent respectively. — United Securities

OMAN STOCKS

MUSCAT STOCK EXCHANGE

INDECIES

Index	High	Low	Value	Prev . Value	Diff	Diff %
MSX 30 INDEX	4,875.36	4,833.94	4,860.01	4,871.82	-11.82	-0.24
FINANCIAL INDEX	7,819.04	7,745.13	7,794.16	7,813.30	-19.14	-0.24
Industry Index	6,132.81	6,118.60	6,121.74	6,172.79	-51.04	-0.83
Services Index	1,716.15	1,694.24	1,714.39	1,695.62	18.77	1.11
MSX Shariah Index	521.81	475.89	477.09	480.56	-3.47	-0.72
MSX TR INDEX	6,190.88	6,138.29	6,171.38	6,171.13	0.25	0.00
FINANCIAL TR IDX	8,208.83	8,131.23	8,182.70	8,181.55	1.15	0.01
SERVICES TR IDX	1,842.97	1,819.44	1,841.08	1,817.35	23.73	1.31
INDUSTRIAL TR IDX	6,385.02	6,370.22	6,373.49	6,426.63	-53.14	-0.83

Trading Summary

Volume	Turnover	Trades	Market Cap	Up	Down	Equal	Sec. Traded
9,657,096	3,078,014	974	23,894,400,725	12	16	18	46

SHARE PRICE BULLETIN FOR MONDAY, MARCH 20

REGULAR MARKET

ISIN	SECURITY NAME	VOLUME	TURNOVER	TRADES	OPEN PRICE	HIGH	LOW	CLOSE PR.	PREV. CLOSE	DIFF (RO)	DIFF %	LAST PR	LAST BID	LAST OFFER	PAR VALUE	MARKET CAP
OM0000003000	Al MAHA PETROLEUM	4,885	5,491	4	1.060	1.140	1.060	1.140	1.060	0.080	7.547	1.140	1.140	1.140	0.100	78,660,000
OM0000005005	ALMAHA CERAMICS	8,815	3,690	8	0.420	0.420	0.416	0.420	0.416	0.004	0.962	0.420	0.416	0.416	0.100	23,100,000
OM0000001483	NATIONAL BANK OMAN	6,690	1,708	3	0.252	0.265	0.252	0.265	0.265	0.000	0.000	0.265	0.252	0.265	0.100	430,875,784
OM0000001749	OMAN CEMENT	740	246	1	0.332	0.332	0.332	0.332	0.332	0.000	0.000	0.332	0.332	0.332	0.100	109,849,740
OM0000002168	AL ANWAR CERAMIC	2,597	888	2	0.342	0.342	0.342	0.342	0.342	0.000	0.000	0.342	0.342	0.376	0.100	75,240,000
OM0000002796	BANK MUSCAT	2,082,700	594,338	47	0.290	0.290	0.285	0.288	0.288	0.000	0.000	0.288	0.285	0.288	0.100	2,161,842,354
OM0000003026	OMAN TELECOM	680,015	714,381	31	1.050	1.060	1.050	1.050	1.050	0.000	0.000	1.050	1.050	1.060	0.100	787,500,000
OM0000003125	GLOBAL INV. H	47,000	2,543	4	0.055	0.055	0.054	0.054	0.054	0.000	0.000	0.054	0.054	0.057	0.100	10,800,000
OM0000003398	SOHAR INT. BANK	55,000	5,760	4	0.104	0.105	0.104	0.104	0.104	0.000	0.000	0.104	0.104	0.104	0.100	477,366,478
OM0000002176	JAZEERA STEEL PROD	152,500	44,075	8	0.289	0.290	0.289	0.289	0.290	-0.001	-0.345	0.289	0.288	0.289	0.100	36,095,510
OM0000003968	OOREDOO	6,268	2,584	6	0.420	0.420	0.412	0.412	0.416	-0.004	-0.962	0.412	0.412	0.416	0.100	268,189,023
OM0000001087	OMAN UNITED INSUR	39,615	12,416	6	0.310	0.314	0.310	0.314	0.318	-0.004	-1.258	0.314	0.314	0.320	0.100	31,400,000
OM0000003224	RENAISSANCE SER.	29,000	12,012	7	0.416	0.416	0.412	0.412	0.418	-0.006	-1.435	0.412	0.400	0.416	0.100	97,400,920
OM0000001533	OMINVEST	1,470	735	2	0.500	0.500	0.500	0.500	0.510	-0.010	-1.961	0.500	0.486	0.500	0.100	334,182,713
OM0000001525	OMAN INVST& FIN.	11,500	1,386	3	0.122	0.122	0.120	0.120	0.123	-0.003	-2.439	0.120	0.111	0.122	0.100	28,440,000
OM0000001152	OMAN NAT. ENG.	13,000	1,394	3	0.107	0.108	0.107	0.108	0.112	-0.004	-3.571	0.108	0.107	0.108	0.100	16,200,000
OM0000001707	OMAN CABLES INDSTR	4,124	6,402	4	1.560	1.560	1.550	1.550	1.665	-0.115	-6.907	1.550	1.550	1.600	0.100	139,035,000
Total	17	3,145,919	1,410,049	143												

Parallel Market

ISIN	SECURITY NAME	VOLUME	TURNOVER	TRADES	OPEN PRICE	HIGH	LOW	CLOSE PR.	PREV. CLOSE	DIFF (RO)	DIFF %	LAST PR	LAST BID	LAST OFFER	PAR VALUE	MARKET CAP
OM0000002366	AL BATINAH DEV.	3,198	198	1	0.062	0.062	0.062	0.062	0.058	0.004	6.897	0.062	0.059	0.062	0.100	1,860,000
OM0000002275	SHELL OMAN MRK	1,100	950	3	0.864	0.864	0.864	0.864	0.812	0.052	6.404	0.864	0.820	0.864	0.100	82,080,000
OM0000001160	NATIONAL GAS	143,000	14,579	9	0.103	0.104	0.101	0.104	0.101	0.003	2.970	0.104	0.102	0.109	0.100	8,840,000
OM0000005963	PHOENIX POWER	572	34	1	0.060	0.060	0.060	0.060	0.059	0.001	1.695	0.060	0.000	0.061	0.100	87,756,088
OM0000001681	OMAN EMIRATES HO	112,900	9,479	3	0.083	0.084	0.083	0.084	0.083	0.001	1.205	0.084	0.082	0.084	0.100	10,237,500
OM0000004768	MADINA TAKAFUL	63,299	5,730	8	0.090	0.091	0.090	0.091	0.090	0.001	1.111	0.091	0.090	0.091	0.100	15,925,000
OM0000004248	SMN POWER HOLDING	90,250	9,192	9	0.101	0.102	0.100	0.102	0.101	0.001	0.990	0.102	0.100	0.102	0.100	20,362,831
OM0000001418	RAYSUT CEMENT	80,544	10,992	7	0.137	0.137	0.136	0.137	0.136	0.001	0.735	0.137	0.137	0.149	0.100	27,400,000
OM0000001095	DHOFAR INSURANCE	1,325	298	1	0.225	0.225	0.225	0.227	0.227	0.000	0.000	0.225	0.225	0.225	0.100	23,780,984
OM0000001566	OMAN FISHERIES	16,250	1,458	3	0.086	0.090	0.086	0.090	0.090	0.000	0.000	0.090	0.086	0.090	0.100	16,387,056
OM0000001590	MUSCAT FINANCE	4,450	263	2	0.059	0.059	0.059	0.059	0.059	0.000	0.000	0.059	0.059	0.059	0.100	18,121,633
OM0000002648	NATIONAL FINANCE	2,100	298	1	0.142	0.142	0.142	0.144	0.144	0.000	0.000	0.142	0.142	0.142	0.100	77,937,185
OM0000004420	BANK NIZWA	462,211	45,712	22	0.099	0.099	0.098	0.099	0.099	0.000	0.000	0.099	0.099	0.099	0.100	221,458,350
OM0000007043	NATIONAL LIFE INS	870	296	1	0.340	0.340	0.340	0.340	0.340	0.000	0.000	0.340	0.340	0.340	0.100	135,447,276
OM0000008868	THE PEARL REIF	7,500	895	3	0.119	0.120	0.119	0.120	0.120	0.000	0.000	0.120	0.119	0.120	0.100	50,972,425
OM0000005260	OMAN ARAB BANK	1,082	124	1	0.115	0.115	0.115	0.115	0.116	-0.001	-0.862	0.115	0.115	0.120	0.100	191,982,150
OM0000008934	ABRAJ ENERGY SERVICES	5,109,605	1,512,240	708	0.298	0.299	0.294	0.295	0.299	-0.004	-1.338	0.295	0.295	0.294	0.100	227,209,000
OM0000002374	UNITED FINANCE	158,169	9,945	8	0.063	0.063	0.062	0.062	0.063	-0.001	-1.587	0.062	0.062	0.063	0.100	21,646,953
OM0000003661	VOLTAMP ENERGY	115,800	12,738	9	0.110	0.110	0.110	0.110	0.112	-0.002	-1.786	0.110	0.110	0.110	0.100	8,954,303
OM0000002804	ASAFFA FOODS	4,850	952	7	0.200	0.200	0.190	0.190	0.200	-0.010	-5.000	0.190	0.190	0.196	0.100	22,800,000
OM0000008447	OMAN REIT FUND	25,700	1,850	4	0.072	0.072	0.072	0.072	0.078	-0.006	-7.692	0.072	0.072	0.072	0.100	33,925,420
OM0000002267	GULF MUSHROOM P	1,320	287	4	0.220	0.220	0.210	0.211	0.230	-0.019	-8.261	0.211	0.211	0.220	0.100	9,656,583
OM0000004776	TAKAFUL OMAN	7,682	307	2	0.040	0.040	0.039	0.039	0.043	-0.004	-9.302	0.039	0.039	0.047	0.100	9,750,000
Total	23	6,413,777	1,638,818	817												

BILATERAL TRADE

Qatar-India Trade Mission 2023 concludes

MUMBAI: Qatar Development Bank (QDB) organised the "Qatar-India Trade Mission 2023" from 15th-16th March in Mumbai, to further strengthen the commerce, trade and business relationship between Qatar and India.

The Mission witnessed a big boost in trade agreements and initiatives as agreed upon by business representatives from Qatari exporters and Indian buyers.

The Qatar-India Trade Mission saw participation from 23 leading exporters from Qatar, from various of manufacturing sectors such as aluminum alloys & profiles, base oils, copper wires, semi-treated wax, medical devices, syringes, valves, and wellheads. Companies from key service sectors such as waste management, healthcare, event solutions, educational technology, fintech solutions, F&B services, health tech solutions and ride hailing applications companies also marked their presence.

The mission was a tremendous success with the Qatar mission meeting more than 150 Indian companies to discover new business opportunities and exchanging businesses and ideas.

Opening remarks

In his opening remarks at the Qatar-India Trade Mission 2023, Dr. Hamad Salem Mejegheer, Executive Director, Qatar Export Development and Promotion Agency, Qatar Development Bank said, "India is a very strategic trade partner for Qatar and has been growing steadily over the decades. With over $18 billion of trade between our two countries in 2022, we are confident of increasing this further in the coming years. In terms of percentage, the trade between the two countries saw a 33 per cent growth from 2021."

Dr Manik G. Gursal, IAS, Additional Commissioner (Industries), Government of Maharashtra, also graced the occasion with his presence. "India and Qatar as two growing nations have many commonalities. Both these nations have a very young average age. India stands at 29 while it is 34 years for Qatar. Even the climate is similar and in Innovation too. Qatar is one of the richest countries in the world and we are happy to have trade dialogues with them. Today, Maharashtra is laying down red carpets for companies to invest in and removing the very concept of red tape. As a part of the Industries Department, We, promise to do our best and ensure there are speedy approvals and guidance at every step," Dr Gursal said.

Saurabh Sangla, Executive Director, Signet Industries Ltd./Adroit Industries Ltd. & Co-Chairman International Business, CII Mumbai - Western Region also remarked, "The idea behind this "Mission" which will be a first in a series of Qatar-Indian Trade Missions is to help and assist importers, wholesales, distributors and enterprises who are aiming to look at Middle East as a strategic market. India is one of the top three largest export destinations for Qatar and is also the top three sources for Qatar's imports. Due to the direct shipping lines from India's ports to the ports of Qatar, both countries are seeing a substantial increase of trade which is very encouraging."

"This trade mission is a good initiative by the two countries. Qatar is a big part of our energy security. This meet is all about a strong connect between Small and Medium Enterprise (SME) business. We believe this is just the beginning and we want everyone here to share their thoughts and experiences," said Shantanu Bhadkamkar, Chairman, ASSOCHAM Maharashtra State Development Council & MD, ATC Group.

The Qatar-India Trade Mission created a perfect avenue for both countries to exchange their expertise, capabilities and opportunities for growth, all under one roof.

Qatar Development Bank (QDB), previously known as Qatar Industrial Development Bank, was established in Qatar in 1997 by Emiri Decree No. 14 as a developmental organization with the primary objective of fueling industrial growth and driving the private sector's economic diversification. — ANI

SUSTAINABLE MARINE TRANSPORTATION

Region's first all-electric boat and yacht building plant planned

DUBAI: Advancing the prospect of sustainable marine transportation in the region, a pioneering electric marine vessel maker, Crown Electric Ships and Boats Dubai, announced clinching a deal with the Badr Sultan Group of Kuwait, to develop and supply a fleet of zero-emission electric yachts for the region.

The company said the deal valued at an initial order of $10 million is for developing a fleet of electric vessels ranging from 7.3-metre electric cabin cruisers to 23.9-metre electric catamarans specifically designed for the Middle East market.

The initial deal was signed by the Managing Director of Badr Sultan Group, Ayman Badr Sultan al-Essa, and SonuJayan, Chairman of Crown Electric Ships and Boats. The deal was initiated at the recently concluded defence expo, IDEX/NAVDEX 2023 in Abu Dhabi.

"The market demand for catamarans and day cruisers has been fulfilled by products developed for the international market. The Middle East market has specific requirements due to high temperatures, humidity, and sea states. Crown Electric Ships and Boats, which has experience in the development of special-purpose electric vessels, including unmanned electric boats for the defence industry, has taken up the challenge of developing sustainable electric vessels specific to the Middle East region," said Ayman Badr Sultan al-Essa.

Lekshmi Salaja, vice chairperson of Crown Electric Ships and Boats said that the deal will have a significant impact on sustainability and net zero initiatives in the Middle East region. "A mid-sized cruise ship's emissions are equal to 1 million cars, and Crown has been developing electric boats from 7 meters up to 23 meters and is moving towards the development of sustainable super yachts," she added.

Crown is also looking at setting up an all-electric boat and yacht manufacturing plant in the UAE, which will support the local economy by creating jobs.

"Electric boat and yacht building will give a significant boost to the Middle East economy as a manufacturing hub. The electric yacht market is standing at the same position where the electric car market stood in 2011 due to advancements in battery technology in the past couple of years," Sonu Jayan said.

The Mena region is home to 12.6 per cent of the global superyachts. The combined revenue of the top three shipbuilding companies globally adds above $100 billion and, surprisingly, none is from the Middle East, he added.

ECONOMIC WATCH

China cuts reserve ratio to boost economy

BEIJING: China has announced its first cut in the amount of cash that banks must hold as reserves this year to bolster the economic growth momentum after investment stabilised and consumption rebounded in the first two months.

The People's Bank of China, the central bank, said it would cut the reserve requirement ratio (RRR) by 0.25 percentage points for financial institutions from March 27 to keep liquidity reasonably ample and serve the real economy.

After the reduction, the weighted average RRR for lenders, except those already implementing a 5-per cent ratio, will drop to around 7.6 percent.

The central bank said the move aims to serve the real economy and keep liquidity reasonably ample in the banking system. With 268.2 trillion yuan (about $39 trillion) of deposits in Chinese banks at the end of February, the cut will unleash around 600 billion yuan of medium and long-term liquidity, Bruce Pang, the Greater China chief economist of real estate and investment management services firm JLL, said.

With more cash reserves unlocked, banks will be able to enhance their ability to expand credit, analysts said. -Xinhua

LIFESTYLE

RESEARCH SHOWS SHORT NIGHT-TIME SLEEP DOUBLES RISK OF CLOGGED LEG ARTERIES

REGARDING LONG SLEEP, IN AN OBSERVATIONAL ANALYSIS OF 53,416 ADULTS, SLEEPING EIGHT HOURS OR MORE PER NIGHT WAS LINKED WITH A 24 PER CENT HIGHER RISK OF PAD COMPARED WITH SEVEN TO EIGHT HOURS (HR 1.24; 95%CI 1.08-1.43)

Getting enough sleep is essential for maintaining optimal health and well-being. According to research published in the European Heart Journal — Open, an ESC journal, sleeping less than five hours each night is linked to a 74 per cent increased risk of developing peripheral arterial disease (PAD).

"Our study suggests that sleeping for seven to eight hours a night is a good habit for lowering the risk of PAD," said study author Dr. Shuai Yuan of the Karolinska Institute, Stockholm, Sweden.

More than 200 million people globally have peripheral artery disease (PAD), 2 where arteries in the legs are clogged, restricting blood flow and increasing the risk of stroke and heart attack.

Dr. Yuan said, "Insufficient night-time sleep and daytime napping have previously been associated with a raised risk of coronary artery disease which, like PAD, is caused by clogged arteries. In addition, sleeping problems are among the top ranked complaints in PAD patients. There are limited data on the impact of sleep habits on PAD and vice versa, and our study aimed to fill that gap."

The study included more than 650,000 participants and was conducted in two parts.3 First, the researchers analysed the associations of sleep duration and daytime napping with the risk of PAD. In the second part, the investigators used genetic data to perform naturally randomised controlled trials — called Mendelian randomisation — to examine causality of the associations.

Dr. Yuan said, "Observational analyses are limited by reverse causality - meaning that if an association between sleep habits and PAD is found, we cannot be certain if sleep habits caused PAD or having PAD caused the sleep habits. Mendelian randomisation is a robust method for evaluating causality and provides more certainty about the results."Taken together, the strongest evidence was for short sleep, where the relationship with PAD went both ways. In an observational analysis of 53,416 adults, sleeping less than five hours a night was associated with a nearly doubled risk of PAD compared with seven to eight hours (hazard ratio [HR] 1.74; 95 per cent confidence interval [CI] 1.31-2.31). This finding was supported by further analyses in 156,582 and 452,028 individuals. In the causal studies, short sleep was associated with an increased risk of PAD and, in addition, PAD was associated with an increased likelihood of short sleep.

Dr. Yuan said,"The results indicate that brief night-time sleep can raise the chance of developing PAD, and that having PAD increases the risk of getting insufficient sleep."Regarding long sleep, in an observational analysis of 53,416 adults, sleeping eight hours or more per night was linked with a 24 per cent higher risk of PAD compared with seven to eight hours (HR 1.24; 95 per cent CI 1.08-1.43). This finding was supported by analyses in two larger populations of 156,582 and 452,028 individuals. However, no causal relationships were found between long sleep and PAD. Similar results were reported for napping, where daytime nappers had a 32 per centhigher risk of PAD compared to those who did not nap (HR 1.32; 95 per centCI 1.18-1.49) but no causal links were found. "More studies are needed on the relationships between lengthy night-time sleep, daytime napping and PAD," said Dr. Yuan.

"Although we found associations in the observational studies, we could not confirm causality."He concluded: "More research is needed on how to interrupt the bidirectional link between short sleep and PAD. Lifestyle changes that help people get more sleep, such as being physically active, may lower the risk of developing PAD. For patients with PAD, optimising pain management could enable them to have a good night's sleep." -ANI

> The results indicate that brief night-time sleep can raise the chance of developing PAD, and that having PAD increases the risk of getting insufficient sleep

ROUND-UP

Bank Muscat Leadership Forum held to realise its customer-centric vision

The annual event is held as part of the bank's strategy to ensure that its employees are closely attuned to and aligned with its overall strategy

MUSCAT: In line with its commitment to strengthening communication channels with frontline employees, Bank Muscat, the leading financial services provider in the Sultanate, recently organised Leadership Forum 2023 at the Oman Convention and Exhibition Center, in the presence of Sheikh Waleed K. Al Hashar, Chief Executive Officer, Bank Muscat.

The event was attended by members of the executive management as well as officials and branch managers from both Bank Muscat as well as Meethaq Islamic Banking. The annual event is held as part of the bank's strategy to ensure that its employees are closely attuned to and aligned with its overall strategy. The forum also helped discuss in detail, various aspects of the bank's plans to further develop banking services in Oman, new financial trends, how to face challenges in the sector and the best way to achieve future goals and targets.

The annual gathering brought together employees under one roof to enable a face-to-face exchange of ideas about various banking and finance-related matters.

The event provided an opportunity to highlight important developments affecting the bank and ensure its continued market leadership and stress the importance of continued alignment to the bank's customer-centric vision of "Serving you better everyday", which encourages innovation and continuous improvement of services in response to customer feedback and needs.

During the event, important details of the bank's strategy and plans were discussed as the bank builds further on four decades of success and major achievements to move to the next stage of its evolution. It also underlined the importance of providing an integrated banking experience to enable customers to enjoy the ease of banking and save time.

A large part of the bank's future plans is based on rapid digital transformation, which will enable it to provide innovative products and services. Employees were encouraged to make the best use of the new capabilities and continue to maintain an outstanding performance for the benefit of all customers and partners.

At the end of the leadership forum, employees expressed their appreciation to customers for their continued confidence and trust in the services and products that the bank constantly launches as part of its efforts to meet their diverse needs. Customers are central to all the work performed by bank employees and they are indeed the bank's partners in success. The 2023 Leadership Forum also included a number of presentations and a folk performing arts show that was staged by Bank Muscat employees.

Bank Muscat's annual Leadership Forum ensures that frontline employees are closely aligned with its customer-centric vision and the overall strategy of continuous improvement. As the leading financial services provider in the Sultanate of Oman for over four decades, Bank Muscat has assets of over OMR13 billion and the largest branch network in Oman serving over 2 million customers through 174 branches and more than 800 e-channel devices including Automated Teller Machines (ATMs) and Cash Deposit Machines (CDMs). The bank has been focusing intensely on digital transformation over the past few years as it seeks to continue launching innovative products, services and solutions in line with global financial trends and customer aspirations. Digital transformation, which is a cornerstone of the bank's strategy, was a major topic of discussion at the Leadership Forum because of its importance in the achievement of the bank's future goals.

NATIONAL BANK OF OMAN

NBO partners with Buna to facilitate seamless cross-border payments

MUSCAT: National Bank of Oman (NBO) recently signed an agreement to join the Buna Payment System.

Buna is a cross-border and multi-currency payment system that allows customers to send and receive payments across the Arab region and facilitates remittances, trade and commerce between countries in the Arab world. This move reflects the bank's efforts to meet the needs of its customers and make every experience simpler and more seamless.

Abdullah Al Hinai, CEO of NBO, said, "The introduction of Buna is a huge step forward for NBO and our customers as we look to provide more intuitive platforms and offer our customers more efficient and secure payment solutions. We are proud of our team for achieving this milestone and we look forward to working with our partners at Buna to unlock opportunities, as one. I would like to express my gratitude to the Central Bank of Oman for supporting this initiative which is in keeping with the efforts to advance the national payment systems in Oman."

Mehdi Manaa, Chief Executive Officer of Buna, said: "We are pleased to welcome the National Bank of Oman to Buna's network of participants. The adhesion of the bank to Buna's platform strengthens efforts to increase trade relations between the Arab world and beyond and helps in the development of cross-border payments in the region, allowing for a smooth process of money transfers." He added, "On this occasion, I would also like to thank the Central Bank of Oman for its continuous support of Buna."

Buna supports trade retail and commerce through credit transfers which constitute the majority of intra-Arab payment volumes, interbank transfers across borders and remittances where the platform has lowered costs and streamlined services. Customers can also make instant payments with end-to-end tracking and monitoring. Buna is linked to regional and global networks to clear and settle card payments at the point of sale and ATMs.

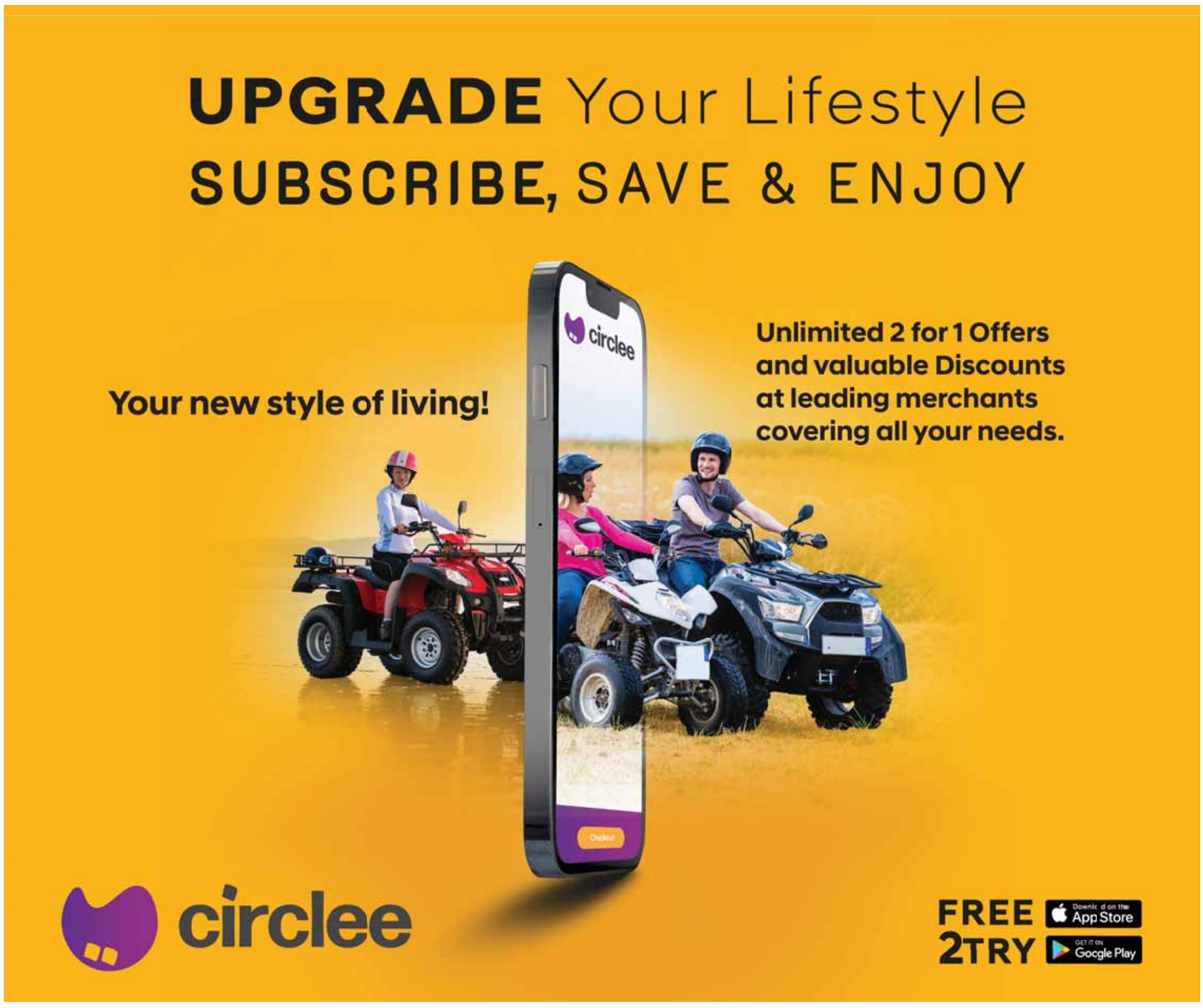

MYMO express

All in One App

كل ما تحتاج في تطبيق واحد

DH

مسقط للخدمات المالية ش م م

Muscat Financial Services LLC

WARNING OF PATENT INFRINGEMENT

The American Company Delaware Horizon INC and its commercial agent in the Sultanate of Oman Muscat Financial Services & Investment LLC, drew the attention of all commercial financial and banking and other institutions to not commit any infringing or continuing to infringe on its patent or any of its elements, registered in most countries, including the United States of America and the Sultanate of Oman, which patent rights are owned by the Delaware Horizon and are related to payment and financial transfer through a cell phone, in order to avoid legal pursuit and legal consequences as per the applicable laws.

For contact and inquiries

info@mfsioman.com
info@delaware-horizon.com

US010032156B2

(12) **United States Patent**
Al-Sahli

(10) **Patent No.: US 10,032,156 B2**
(45) **Date of Patent: Jul. 24, 2018**

(54) **SYSTEM AND METHOD FOR CONDUCTING FINANCIAL TRANSACTIONS USING A MOBILE DEVICE**

(71) Applicant: **Mahmoud Anass Mahmoud Al-Sahli**, Mississauga (CA)

(72) Inventor: **Mahmoud Anass Mahmoud Al-Sahli**, Mississauga (CA)

(*) Notice: Subject to any disclaimer, the term of this patent is extended or adjusted under 35 U.S.C. 154(b) by 0 days.

(21) Appl. No.: **13/875,028**

(22) Filed: **May 1, 2013**

(65) **Prior Publication Data**

US 2013/0246265 A1 Sep. 19, 2013

Related U.S. Application Data

(63) Continuation of application No. 12/918,462, filed as application No. PCT/CA2008/000935 on May 14, 2008.

(30) **Foreign Application Priority Data**

Mar. 9, 2008 (JO) P.110/2008

(51) **Int. Cl.**
G06Q 40/00 (2012.01)
G06Q 20/32 (2012.01)
(Continued)

(52) **U.S. Cl.**
CPC *G06Q 20/3229* (2013.01); *G06Q 20/1085* (2013.01); *G06Q 20/18* (2013.01);
(Continued)

(58) **Field of Classification Search**
CPC G06Q 40/00; G06Q 20/32; G06Q 20/341; G06Q 20/04; G06Q 20/108; G06Q 40/02; G06Q 40/04; G06Q 40/06
(Continued)

(56) **References Cited**

U.S. PATENT DOCUMENTS

5,907,804 A 5/1999 Schroderus et al
6,142,369 A * 11/2000 Jonstromer 235/380
(Continued)

FOREIGN PATENT DOCUMENTS

WO 2006/056802 A1 6/2006
WO 2004/049093 A1 9/2006
(Continued)

OTHER PUBLICATIONS

Canadian Office Action dated Feb. 15, 2011 in Canadian Application No. 2,716,276.
(Continued)

Primary Examiner — Hai Tran
(74) *Attorney, Agent, or Firm* — Hayes Soloway PC

(57) **ABSTRACT**

A Subscriber Identity Module (SIM) Chip Bank system and method for enabling users registered in the system to control their financial and telecommunications resources from their mobile device over a mobile communications network. The system combines mobile network providers and financial services through the use of SIM chips without the need for modifying the users' mobile devices or SIM chip installed thereon. A SIM Chip Bank System Operator (SCB-O) regulates data flow between users, banks, mobile communications service providers, SIM Chip Automated teller Machines and SIM Chip Service Providing Machines through a plurality of communications channels. Upon a user connecting to the SCB-O to request a transaction, the SCB-O connects to the appropriate bank to authorize the requested transaction. Upon successful completion, reports are sent back and forth to users confirming the event.

18 Claims, 5 Drawing Sheets

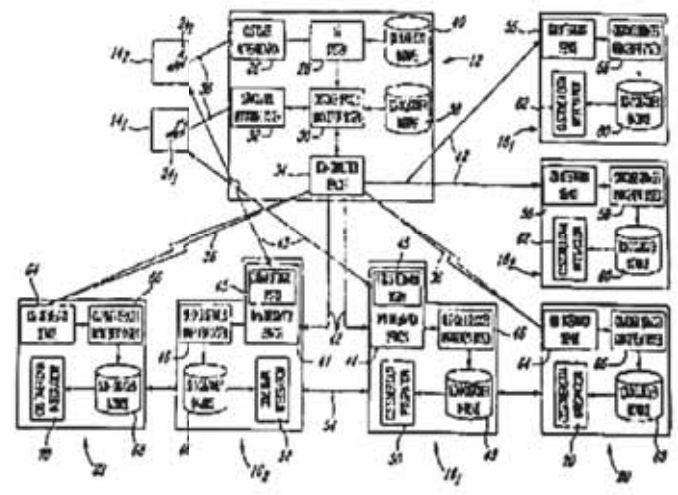

US 10,032,156 B2
Page 2

(51) **Int. Cl.**
G06Q 20/10 (2012.01)
G06Q 20/40 (2012.01)
G06Q 20/18 (2012.01)

(52) **U.S. Cl.**
CPC *G06Q 20/32* (2013.01); *G06Q 20/40* (2013.01); *G06Q 20/4014* (2013.01)

(58) **Field of Classification Search**
USPC 705/35–45
See application file for complete search history.

(56) **References Cited**

U.S. PATENT DOCUMENTS

6,711,262 B1 * 3/2004 Vatanen 380/277
6,868,391 B1 * 3/2005 Hultgren 705/17
7,258,267 B2 * 8/2007 Choi 235/379
2007/0050871 A1 3/2007 Mashhour
2007/0255662 A1 * 11/2007 Tumminaro 705/79
2008/0011825 A1 * 1/2008 Giordano et al. 235/380

FOREIGN PATENT DOCUMENTS

WO 2006/095250 A1 9/2006
WO WO 2006/095250 * 9/2006 ..... G06Q 20/00
WO 2008/008735 A2 1/2008

OTHER PUBLICATIONS

Canadian Office Action dated Jan. 12, 2012 in Canadian Application No. 2,716,276.
Canadian Office Action dated Oct. 18, 2012 in Canadian Application No. 2,716,276.
Notice of Allowance dated Feb. 15, 2013 in Canadian Application No. 2,716,276.

* cited by examiner

ROUND-UP

Mercedes-Benz unveils 3 special Ramadan Service Partner offers

The offers include a 30 per cent discount on AC service, a 22 per cent discount on the economy service for Actros MPII and Actros MPIII and a 30 per cent discount on economy service for the new Actros and Arocs

MUSCAT: Mercedes-Benz Oman has announced three limited-time special Service Partner offers on its range of commercial vehicles during the holy month of Ramadan.

Available from March 20 until April 20, the offers include a 30 per cent discount on AC service, a 22 per cent discount on the economy service for Mercedes-Benz Actros MPII and Actros MPIII and a 30 per cent discount on economy service for the new Mercedes-Benz Actros and Mercedes-Benz Arocs.

Gary Brown, General Manager, Commercial Vehicles Mercedes-Benz Oman, said, "In true Mercedes-Benz fashion, we constantly place customers and their needs front and centre with our comprehensive Ramadan Service Partner Offers. Customers can enjoy an unrivalled experience when visiting the Mercedes-Benz Service Centres in Muscat, Haima, Salalah, and Sohar, where our team of Service Advisers are available to help with the high levels of after care that has become a hallmark of Mercedes-Benz in Oman for over 50 years."

The economy service for the new Mercedes-Benz Actros and Arocs includes a check and adjustment of fluid levels, diagnostic check-up of vehicle electrical system, a check for oil leaks on major components, engine oil and oil filter change, and fuel filter change, for OMR173 including VAT.

The economy service for Mercedes-Benz Actros MPII and Actros MPIII comes complete with a check and adjustment of fluid levels, diagnostic check-up of vehicle electrical system, a check for oil leaks on major components, engine oil and oil filter change for OMR92 including VAT for Actros with 6-cylinder engine and OMR 96 including VAT for Mercedes-Benz Actros with 8-cylinder engine. The A/C Service for Mercedes-Benz Actros MPII and Actros MPIII includes leak inspection charges, and vacuum and recharge of A/C gas, A/C oil and A/C dust filter for OMR51 including VAT.

With a rigorous prioritisation of providing all customers with the very best customer experience, Mercedes-Benz Oman Commercial Vehicles offer an unrivalled range of tailor-made and reliable transport solutions.

WORKPLACE WELLNESS

Seminar on health and wellness organised

MUSCAT: In line with summer approaching and the holy month of Ramadan just a few days away, Protectol Oman along with IOSH Oman organised a seminar on health and wellness at workplace at Inter City Hotel Muscat.

The networking event was attended by Abdul Rahman Al Yahyaei - Opal CEO as the guest of honour. The panel discussion was moderated by Dr Neelesh Sogani (IOSH Oman Branch Chair) along with panellists Dr Ali Al-Lawati (OQ), Humaid Al Bulushi (Opal Oman), Dr Idris Saleh Al Ubaidani (bp), Sulaiman Al Sulaimi (OQ), Dr Hani Al Shuraiqi (Sohar Aluminium), Dr Dilip Singhvi (Shifa Hospital) and Mohamed Aasim from Protectol.

The event was well attended by industry leaders and expert panellists and everyone who attended expressed the need for employers to create a wellness and health programme. Employees need to be made aware of the benefits of wellness and health and the industry needs to provide resources and support to the employees to help them improve their health.

During the event, Al Yahyaei expressed how he had turned around the HSE in the corporate sector and also expressed his concern about implementing HSE in the mining sector which has recently come under his umbrella. He also said about how he is planning to focus on workers' welfare which he has taken as a task on the warfront to get implemented in all sectors.

CEO of Protectol Mohammed Nissamudin and Country Head of Oman for Protectol Ajit Panicker expressed their happiness at organising this event.

HOLY MONTH

Shangri-La Barr Al Jissah unveils host of exquisite, savoury specials this Ramadan

MUSCAT: Shangri-La Barr Al Jissah, Muscat is back this year with a host of exquisite and savoury specials for this holy month of Ramadan.

Whether guests dine indoors or alfresco at Al Tanoor or in the comfort of our air-conditioned Layali Tent & Lounge for Suhoor, they will be spoilt for choice with generous buffet spread options including live stations for iftar or a fusion of culinary favourites served A la Carte for Suhoor.

Each experience will give guests generous space and unparalleled views like no other in Muscat and residents of the city are invited to dine on a range of Ramadan classics and global favourites, paired with live performances throughout the month.

"This year, Ramadan at Shangri-La Barr Al Jissah will be exceptional as we bring in incredible and authentic flavours from the region with the expertise of our multi-talented Chefs. Our guests will witness an enhanced iftar experience complemented by traditional Oud performances and dazzling decor to make it even more celebratory.

"In line with the Ramadan spirit of giving and sharing, our resort will also be spreading some joys with lots of contests to unlock stays and dining experiences at Shangri-La Barr Al Jissah," commented René D. Egle, the Area General Manager of Shangri-La Barr al Jissah and Shangri-La Al Husn, Muscat.

Lavish Iftar Buffet – Al Tanoor

Located in Al Bandar hotel, Al Tanoor restaurant is serving a delicious Iftar buffet, featuring a host of delectable traditional Ramadan delicacies inspired by local, regional, and international cuisines, from Maghrib prayer onwards. The extensive buffet spread will showcase live and A la minute stations including hot and cold mezze, Omani specials, a variety of regional dishes, mixed grill, and classic desserts, along with traditional Ramadan beverages and live entertainment such as Oud players. Al Tanoor is extending its seating area to enable guests to enjoy their meals in the gorgeous alfresco setting overlooking the beach.

Outdoor experience with Layali Tent and Lounge

Savour the full Ramadan experience with our outdoor Layali Ramadan tent, presenting a savoury selection of Omani delights and global culinary favourites served A la Carte paired with the sounds of traditional Arabic artists. Set on the resort's beach, "Layali Tent & Lounge" extends unforgettable Suhour experiences to guests and residents of Oman, who can enjoy a relaxed elegant, air-conditioned ambience, or a captivating setting by the outdoor lounge.

Enchanting Majlis

Set against the backdrop of rugged mountains and the Gulf of Oman, guests can elevate their iftar or suhoor experience when opting to dine in our beautifully adorned Majlis. The resort's garden and different locations are transformed into beautiful Arabian spaces that feature an open-air majlis. Our hosts are invited to dine in the comfort of the private traditional Omani outdoor tent and relish a decadent menu presenting a fusion of flavours and traditional beverages coupled with entertainment.

Group Iftar

Avail of a special 30% discount when booking for groups of more than 100 persons. This year the ballroom of Barr Al Jissah is available to families, groups and business partners wishing to experience the holy month with their close ones. From medium to large-sized groups of a minimum of 10 persons, guests can expect no less than a memorable evening complemented by Shangri-La's heartfelt hospitality and generous cuisine inspired by the region.

Luxurious Eid getaway celebrations

Celebrate timeless moments with your loved ones this coming Eid Al Fitr when staying at Shangri-La Al Husn and Shangri-La Barr Al Jissah, Muscat. Combine Eid celebrations with a romantic escape in your private clifftop castle and indulge in a wealth of luxurious experiences. Available to guests aged 16 and over, the resort's dramatic Omani architecture and spectacular natural setting provide the perfect backdrops for relaxation and adventure.

PROMOTION

'Biggest Excitement' benefits now available on Toyota Hilux

MUSCAT: Own a Toyota Hilux and get exclusive benefits. The benefits include service 3 years/30,000km (whichever is earlier) and insurance 1 year or cash gift in lieu of insurance OMR200 to OMR250 and 8 Toyota Raize SUV raffles. The campaign is valid until May 10. (Prospective buyers may be advised that the benefits vary between model variants, model year and manufacturing year. Terms & Conditions apply. Customers can visit any Saud Bahwan Automotive showroom for exact details.)

The powerful Hilux Adventure is equipped with a mighty 4.0 Litre V6 Engine packing a mighty punch with 235 HP & 38.3 Kg-m Torque. It has an Auto Disconnect Differential to keep the tempo going. The 4.0 Litre V6 Toyota Hilux Adventure is a truly exciting mean machine that's been developed by Toyota to get your pulse racing. Similarly the Hilux 4X4 is equipped with a 2.7 Litre Petrol Engine that is available in 5-speed Manual Transmission and 6 Speed Automatic Transmission, outputting 164 HP.

The Hilux is not only a tough vehicle but also an advanced pick-up with stylish cues hitherto found only on SUVs. The front of the Hilux gives a sense that the vehicle is wider than it is. This is achieved by the horizontal Bars that make up the Grille and Sleek Headlamps that wrap around the front of the Fenders. The Hilux sports a thick, chunky Front Bumper sculpted like an SUV, Front Fog lamps, Alloy Wheels, apart from Side Stripes that adorn the vehicle.

If you are looking for some of the finest moments on the road or off-road then the Hilux rises above expectations in all aspects. The Hilux really is two vehicles in one: a work truck through the week and a family vehicle on weekends, thanks to added comforts and safety features.

We Fix

FOR COST EFFECTIVE EXHIBITION BOOTHS/ DISPLAY STANDS

Call us on

99614066

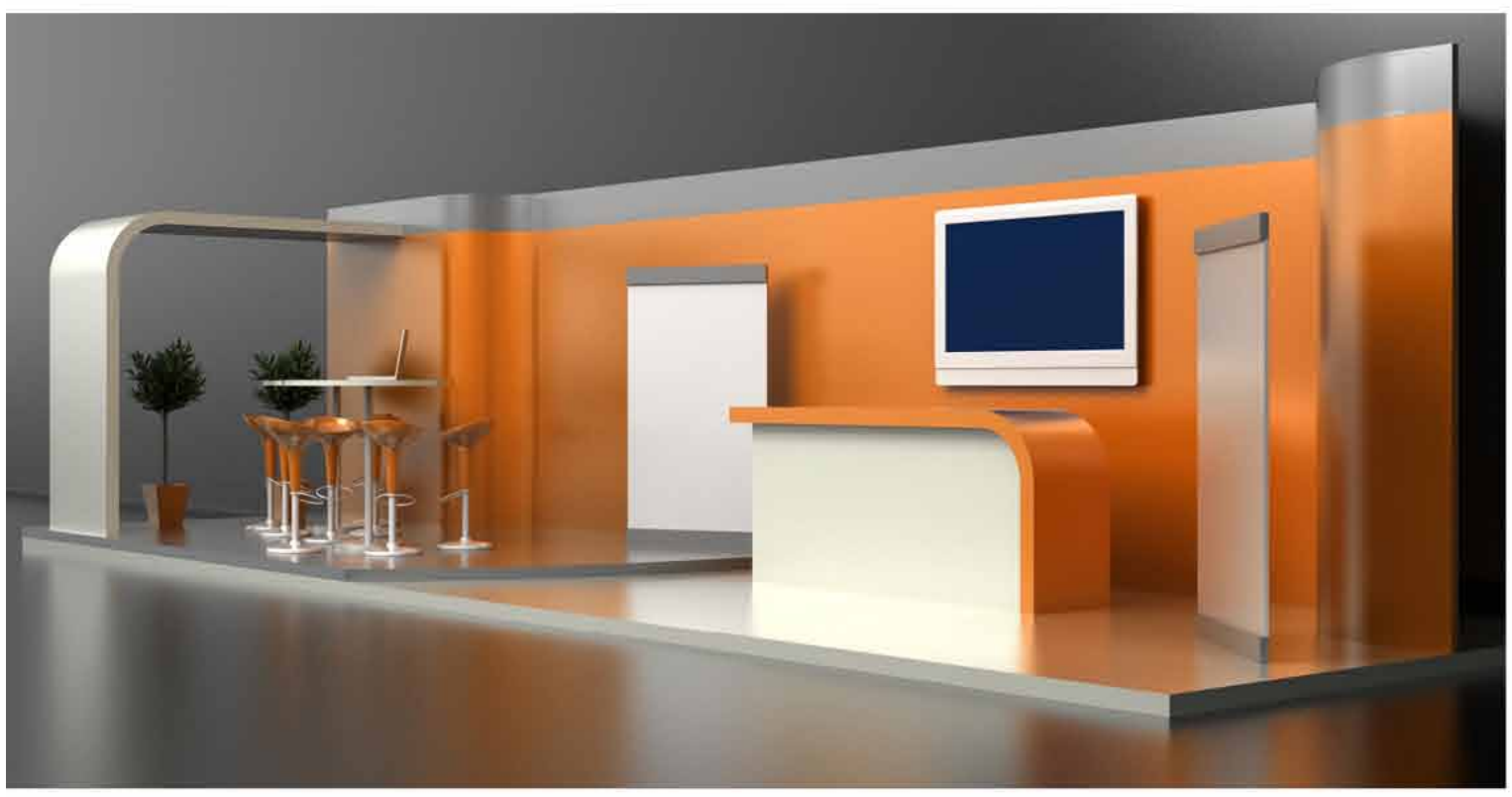

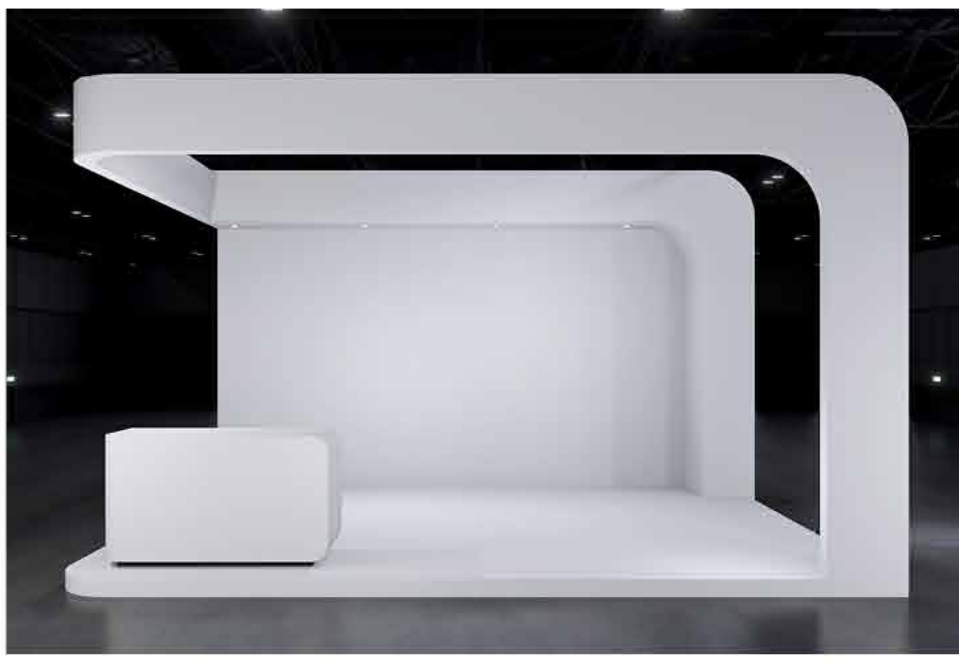

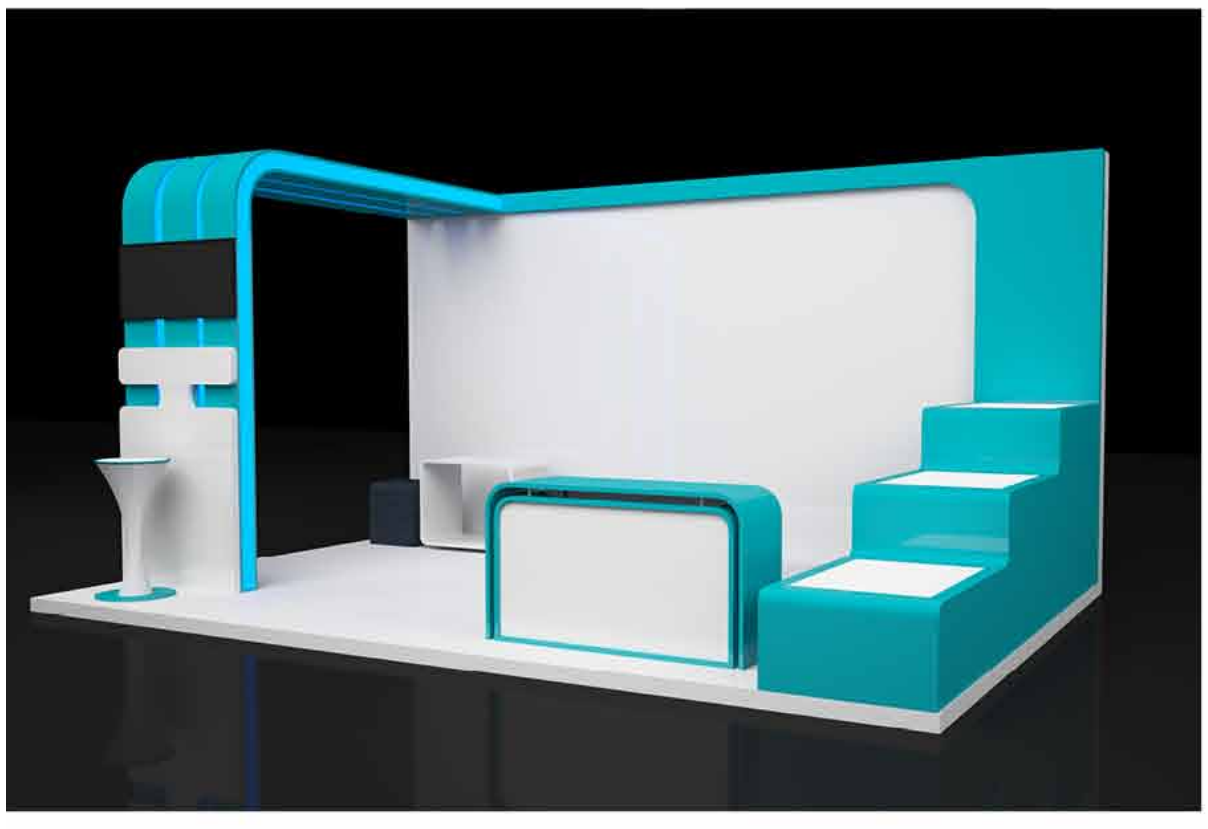

Contact us on wefix@mmg.om
or call/whatsApp 99614066/ 95405033
to make customized exhibition booths

BESTUNE
Built to inspire صُمِمت لتُلهم الآخرين

Choose a premium driving experience this Ramadan

T99
2.0L Turbo Engine, 220hp,
6-speed AT

T77 PRO
1.5L Turbo Engine, 168hp,
7-speed DCT

B70
2.0L Turbo Engine, 220hp,
6-speed AT

B70S
2.0L Turbo Engine, 215hp,
6-speed AT

FREE SERVICE
3 YEARS OR 55,000 KMS#

FREE INSURANCE@

FREE REGISTRATION^

FREE WINDOW TINTING AND CERAMIC COATING^^

MANUFACTURER'S WARRANTY
6 YEARS OR 250,000 KMS**

KNOW MORE

Offer valid from 23rd February to 22nd April 2023 on all models purchased through the BESTUNE Showroom Retail Offer. #Whichever is earlier. Periodic Maintenance Service only. Offer includes only 10,000 kms service intervals. @For 1st year, Oman & UAE only. ^For 1st year only. ^^Window Tinting and Ceramic Coating warranty will be 3 years against manufacturing defects and will be fitted at our own Service Centres. **Whichever is earlier. Images shown are for illustrative purpose only. Specification may vary as per the model variant. To know more, please visit the BESTUNE Showroom.

C.R : 1159794

Gulf Great Sands LLC

Visit Bestune Showroom:
Building No. 346, Way No. 41, Al Rumelah Street, Al Wattayah

bestuneoman bestune-oman.com

7999 9073
800 50 800

Discover a New Side of Maysan Square - Duqm

RESIDENCES 1

Prices starting from OMR **22,500**

Studio, 1 and 2 Bedroom Apartments

Available to all nationalities with Visa Residency

BOOK YOURS NOW!

92810622 / 72227786 / 99898268

UPGRADE Your Lifestyle
SUBSCRIBE, SAVE & ENJOY

Your new style of living!
Unlimited 2 for 1 Offers and valuable Discounts
at leading merchants covering all your needs.

circlee

FREE 2TRY

Download on the App Store

GET IT ON Google Play

TOYOTA
TOYOTA'S
BIGGEST
EXCITEMENT !
GRAND
RAFFLE*
WIN 8 RAIZE
RAIZE
INSURANCE* 1 YEAR
Or Cash Gift in Lieu of Insurance From RO 125 Up to RO 300
SERVICE*
FROM 2 YEARS / 20,000 KMS
(WHICHEVER IS EARLIER)
UP TO 5 YEARS / 50,000 KMS
(WHICHEVER IS EARLIER)
COROLLA
HILUX
YARIS
*Conditions Apply
CLICK
SAUD BAHWAN Group
Saud Bahwan Automotive LLC
ISO 9001:2015 CERTIFIED C.R NO:1703412
Facebook.com/toyotaoman
@toyotaomanofficial
Youtube.com/toyotaoman
www.toyotaoman.com